WELCOME TO TECHNICAL ORDER 00-105E-9, 1 FEBRUARY 2006, REVISION 11.

THIS IS SEGMENT 24 COVERING CHAPTERS 20, 21 and 22.

TO NAVIGATE

CLICK ON THE BOOKMARKS AND CLICK ON THE (+) SYMBOLS, THEN CLICK ON SUBJECT LINKS TO GO TO SPECIFIC VIEWS IN THIS SEGMENT.

CONTINUE

NOTICE

CONTACT

TO GO DIRECTLY TO THE TECHNICAL ORDER, CLICK ON THE CONTINUE BUTTON.

TO SEE THE SEGMENT INFORMATION CHANGE NOTICE, CLICK ON THE NOTICE BUTTON.

TO CONTACT THE TECHNICAL CONTENT MANAGER , CLICK ON THE CONTACT BUTTON.

TECHNICAL ORDER 00-105E-9 TECHNICAL CONTENT MANAGER

WRITTEN CORRESPONDENCE:

HQ AFCESA/CEXF
ATTN: Fire and Emergency Services Egress Manager
139 Barnes Drive Suite 1
Tyndall AFB, Florida 32403-5319

E-MAIL: HQAFCESA.CEXF@tyndall.af.mil

INTERNET: HQ AFCESA Fire and Emergency Services PUBLIC WEB PAGE:
http://www.afcesa.af.mil/CEX/cexf/index.asp
Safety Supplements: http://www.afcesa.af.mil/CEX/cexf/_firemgt.asp

PHONE: (850) 283-6150
DSN 523-6150

FAX: (850) 283-6383
DSN 523-6383

For technical order improvements, correcting procedures, and other inquiries, please use the above media most convenient.

SEGMENT 24 INFORMATION CHANGE NOTICE

This page is provided to notifiy the user of any informational changes made to Technical Order 00-105E-9 in this Segment and the current Revision. Informational changes will be referenced in the Adobe Reader's Bookmark tool as a designator symbol illustrated as a <[C]> for quick reference to the right of the affected aircraft. The user shall insure the most current information contained in this TO is used for his operation. Retaining out of date rescue information can negatively affect the user's operability and outcome of emergencies. If the user prints out pages his unit requires, the user shall print the affected page(s), remove and destroy the existing page(s), and insert the newly printed page(s) in the binder provided for that purpose. A Master of this TO shall be retained in the unit's library for reference, future printing requirements and inspections.

CHAPTER	AIRCRAFT	PAGE	EXPLANATION OF CHANGE
None.			

NOTE

Chapter 20 contains emergency rescue and
mishap response information for the following aircraft:

USN	**AV-8B (TAV-8B)**

CHAPTER 20

U.S. NAVY

ATTACK

AEROSPACE EMERGENCY RESCUE AND MISHAP RESPONSE INFORMATION

20-1. INTRODUCTION AND USE.

20-2. This section contains emergency rescue and mishap response information illustrations in alphanumerical order relative to type and model of aircraft. This arrangement of illustrations is maintained from Chapter 4 throughout the remainder of the publication.

20-3. GENERAL ARRANGEMENT.

20-4. Aircraft type designation has been positioned in the upper right corner of the horizontal illustration for rapid identification. Additional aids to rapid orientation are:

a. Recent technological advances in aviation have caused concern for the modern firefighter. Aircraft hazards, cabin configurations, airframe materials, and any other information that would be helpful in fighting fires, the locating and rescue of personnel will be added as the information becomes available.

b. Suggested special tools/equipment are listed in the upper left corner, on the Aircraft/Entry page of each listed aircraft.

c. Procedural steps covering emergency/normal entrances, cut-ins, engine/APU shutdown, safetying ejection/escape systems, and aircrew extraction are outlined on the left side of each page with coordinated illustrations on the right.

d. Illustrations located on right side of pages are coordinated with text by numerals and small letters depicting both paragraph and subparagraph on the page.

e. Each illustration is consistently colored and/or pattern keyed to highlight essential emergency rescue information.

f. Details are pulled directly from the illustration to highlight an area, thus eliminating unnecessary searching for desired information.

AIRCRAFT PAINT SCHEME

AV-8B

AIRCRAFT DIMENSIONS

NOTE:

The AV-8B has one crewmember while the TAV-8B has two.

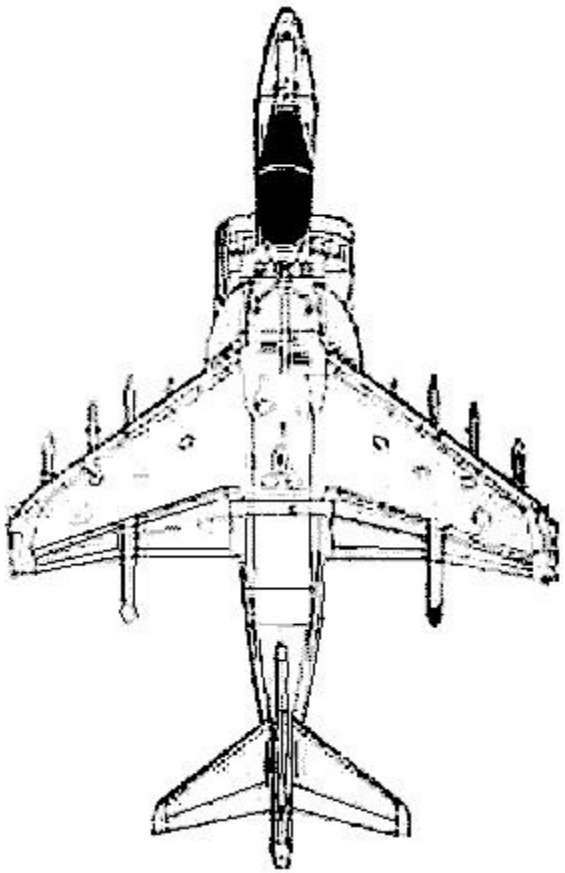

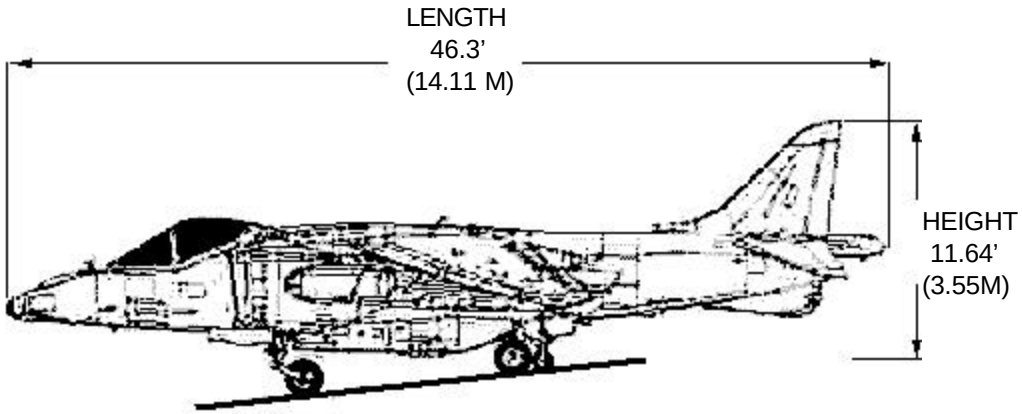

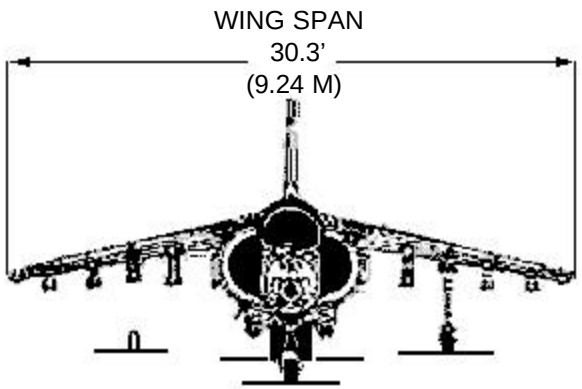

AIRCRAFT HAZARDS

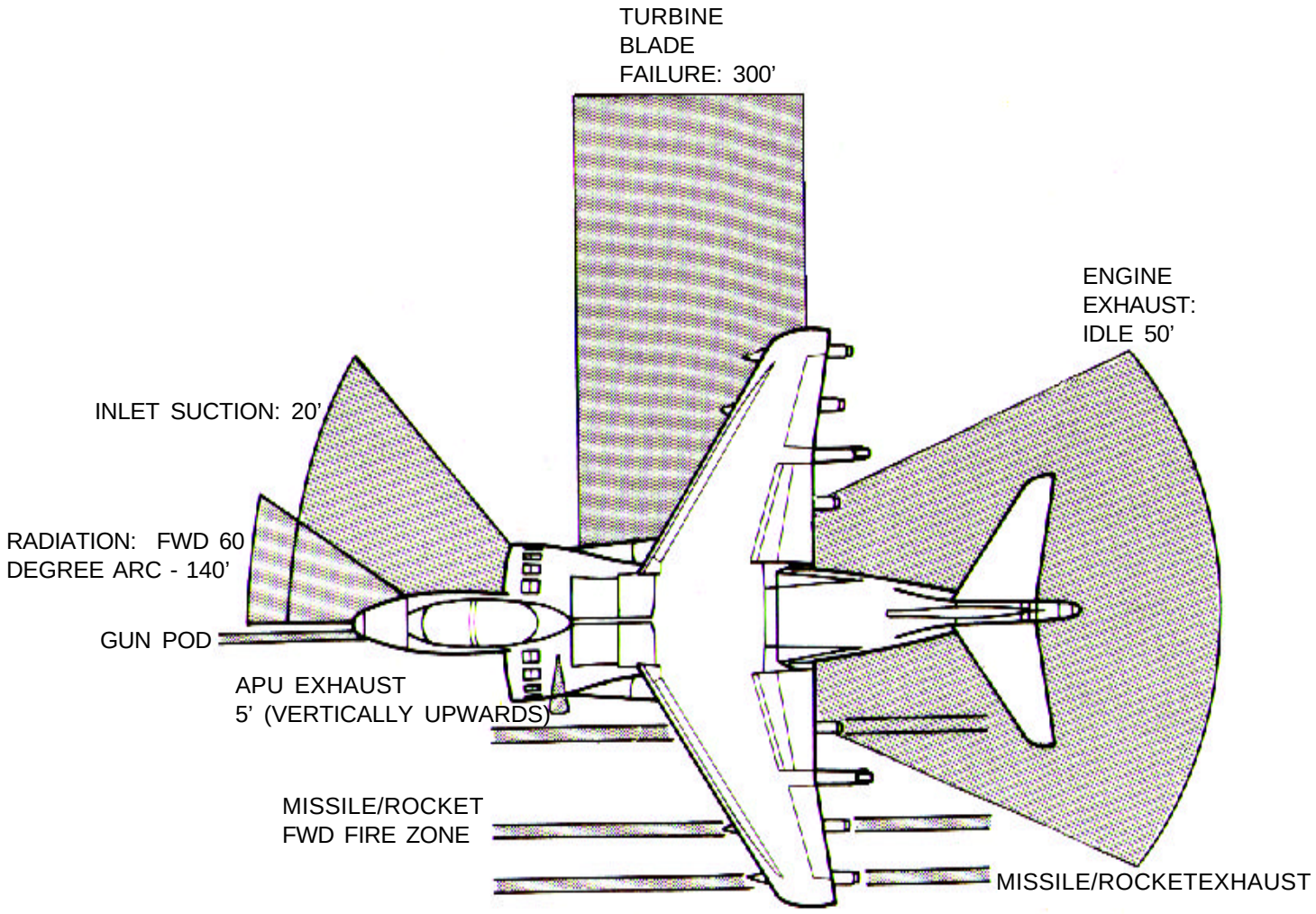

AIRCRAFT HAZARDS-Continued

ARMAMENT LOCATIONS

WARNING

Wing and fuselage stations have pylon ejector cartridges.

WARNING

In the event of wheels-up landing, secure all electrical power to ensure armament system safety.

NOTE:
In normal wheels down landing, ground wheels down switches, and safety the armament systems.

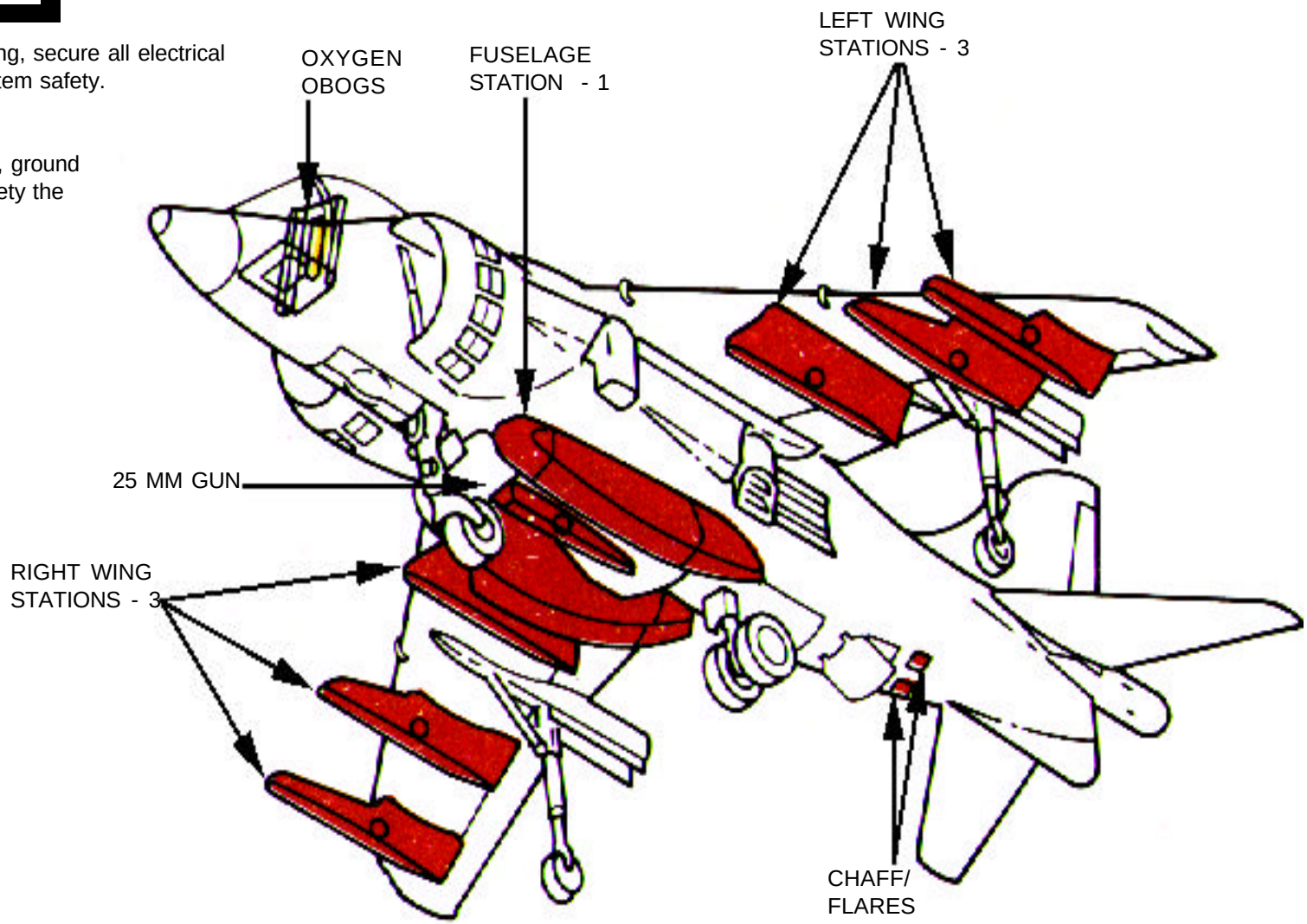

AIRFRAME MATERIALS

LEGEND

- ALUMINUM
- STEEL
- CARBON EPOXY
- TITANIUM
- OTHER - FIBERGLASS/KEVLAR

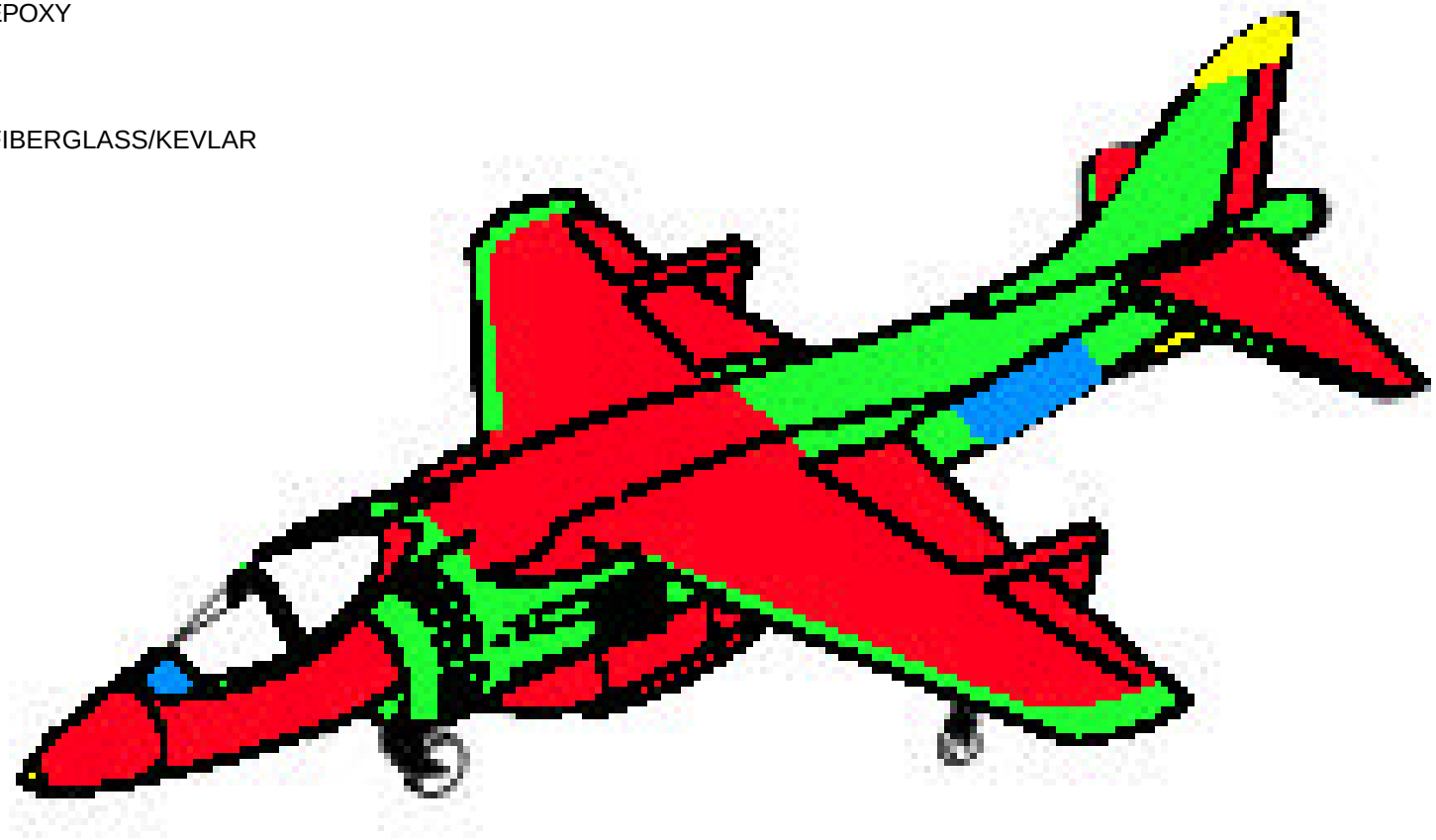

SPECIAL TOOLS/EQUIPMENT
Power Rescue Saw
Crash Ax
1 1/16 Inch Open End Wrench
Fire Drill II

AIRCRAFT ENTRY

1. NORMAL ENTRY

NOTE:
Canopy is mechanically actuated by an external release handle located on right side of fuselage below windshield.

a. To open, press latch on normal canopy release handle and pull to unlatch canopy and retractable footstep. Apply downward pressure on step and canopy will fully open.

NOTE:
If retractable footstep cannot be extended, canopy opens without restriction from footstep for about 3 inches. The right hand canopy cable assembly can then be disengaged from footstep at detent assembly by a hard pull on handles provided on canopy arch. With footstep disengaged, canopy is free to be opened.

b. Two additional steps/handholds are located on right side of fuselage. To extend, push buttons on top part of steps/handholds.

FUEL QUANTITIES:
INTERNAL 1141 GALS 4318 LITERS
EXTERNAL 4-300 GALS WING TANKS
1135 LITERS

NOTE:
Pneumatic system pressure3000 PSI.

NOTE:
Oxygen system is OBOGS.

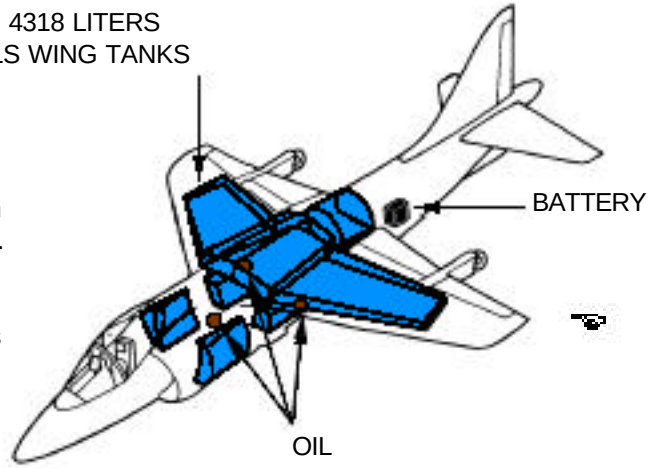

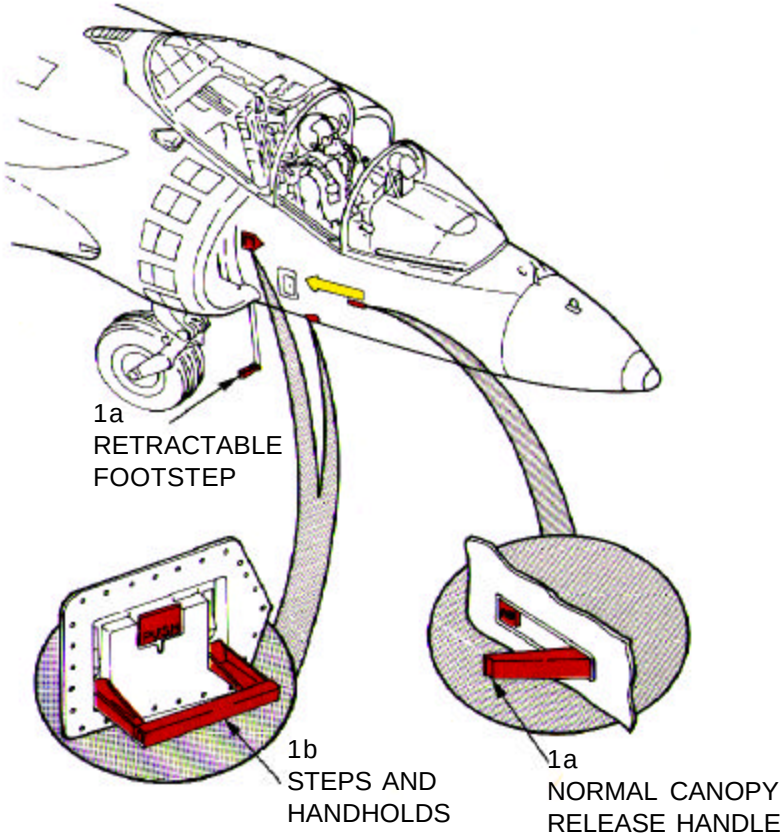

AIRCRAFT ENTRY - Continued

2. Emergency Entry

NOTE:
Canopy can be shattered by using external fracturing handles located on both sides.

WARNING

Fracturing system (pyrotechnic) should not be used if flammable liquids or fumes are present in area.

WARNING

Particles from a blown canopy may exceed 3 sq. in. and cover a blast area of approximately 25 feet.

a. To access handle, push latch button to open door, grip handle and remove from spring clips.

b. To fracture canopy, hold handle, run forward to extend cable approximately 40 inches, face away and jerk handle.

NOTE:
Some aircraft are not equipped with an external fracturing handle.

3. CUT-IN/FORCED ENTRY

a. Canopy is made of acrylic plastic and may be cut with a power rescue saw or crash ax. Cut along canopy frame.

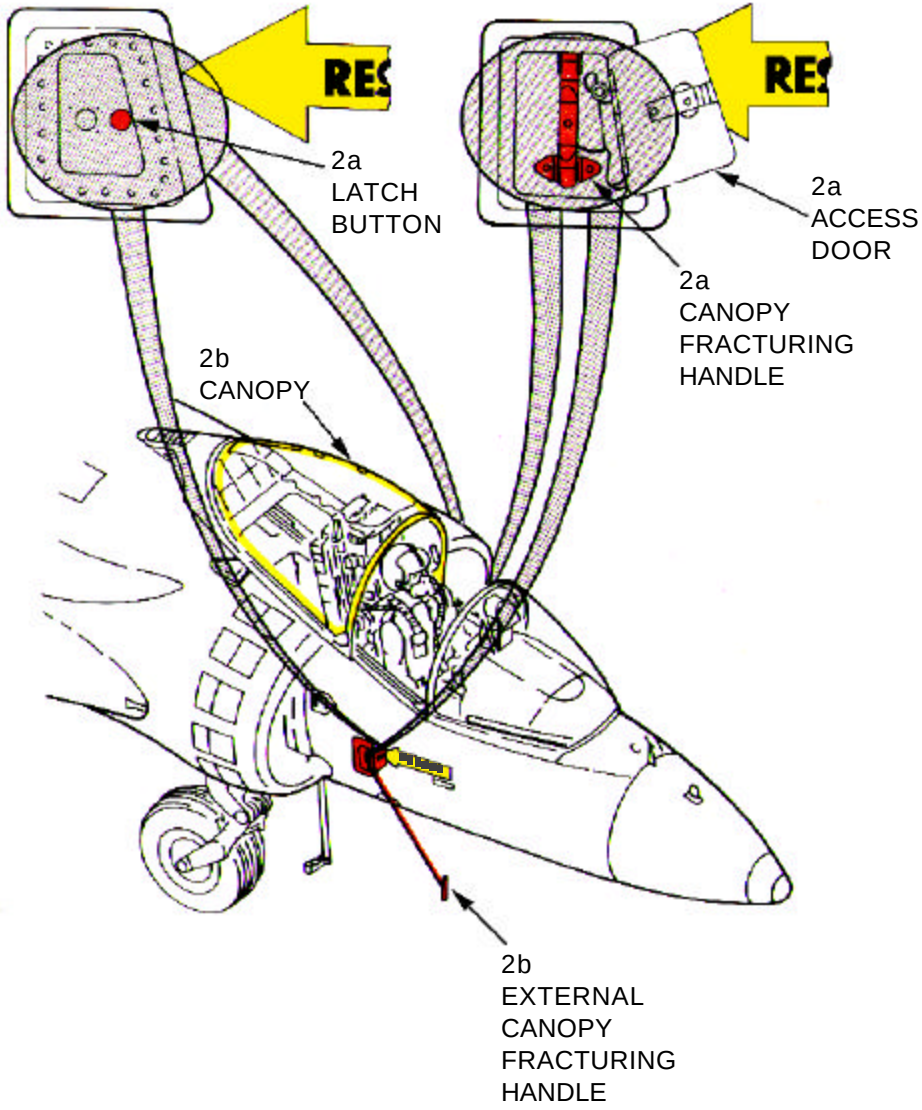

CANOPY SAFETY

NOTE:

Canopy has an explosive detonator. With canopy open, rescue personnel may be seriously injured if ignited.

1. SAFETYING CANOPY INITIATORS

a. Insert safety pin in external mechanically actuated initiator.

b. Insert safety pin in internal mechanically actuated initiator.

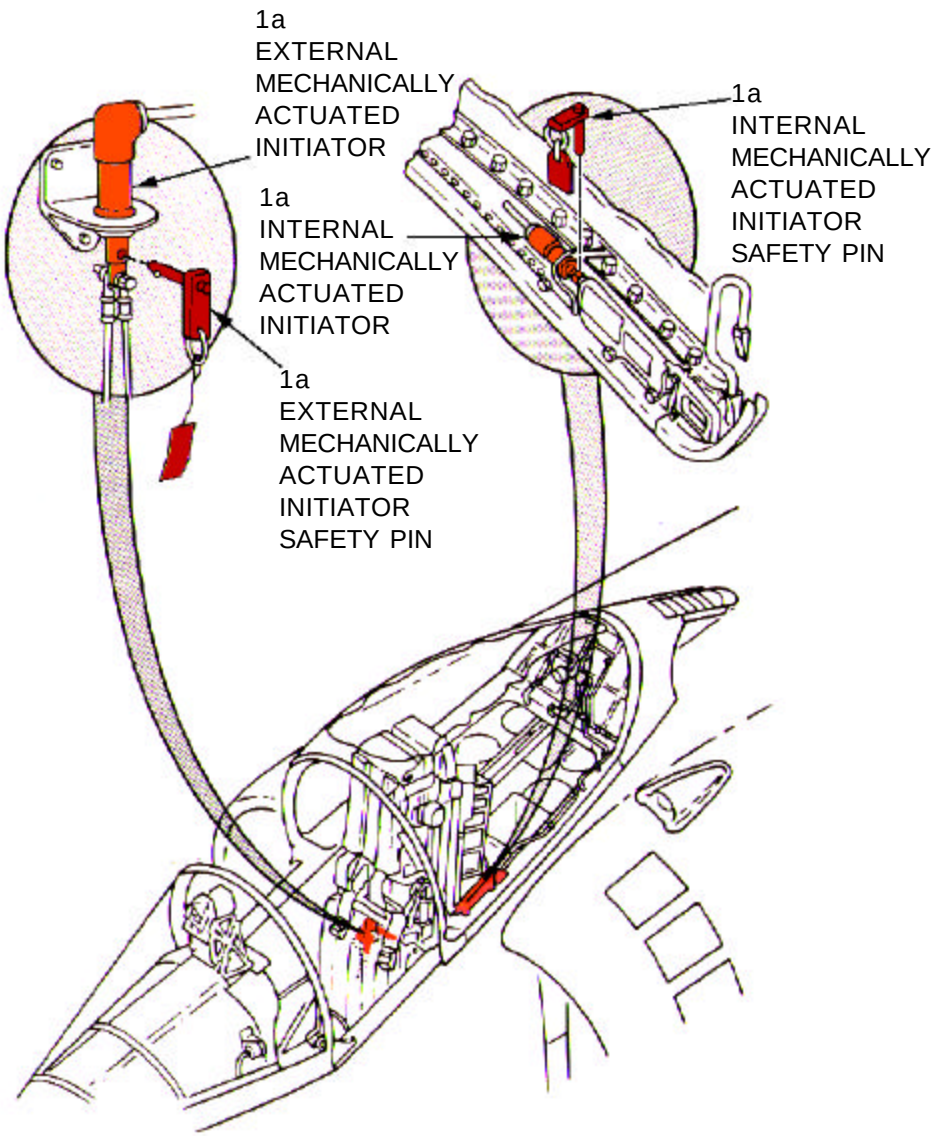

ENGINE AND APU SHUTDOWN AND BATTERY LOCATION

1. NORMAL AND EMERGENCY ENGINE AND APU SHUTDOWN

NOTE:
Engine may be shut down using the throttle or fuel shutoff controls. GTS/APU may be shut down using APU generator switch or battery switch and APU generator switch.

a. Raise throttle finger lifts and move engine throttle lever grip assembly aft to OFF position. When moving throttle aft, throttle finger lifts must be used in order to shut down aircraft.

b. Press handle lock release, located on end of manual fuel shutoff lever and move lever to OFF position. Use of fuel shutoff lever will not immediately shut down aircraft.

c. Place APU generator switch, located on electrical control panel, in the OFF position

d. Place battery switch, located on electrical control panel in OFF (center) position. Next, set and hold APU generator switch in reset position until GTS/APU shuts down.

2. BATTERY LOCATION

a. The battery is located on the underside of the fuselage, aft of speed brake in door 60. Disconnect battery if time permits or battery switch in cockpit is damaged or inaccessible. (See page AV-8B.4.)

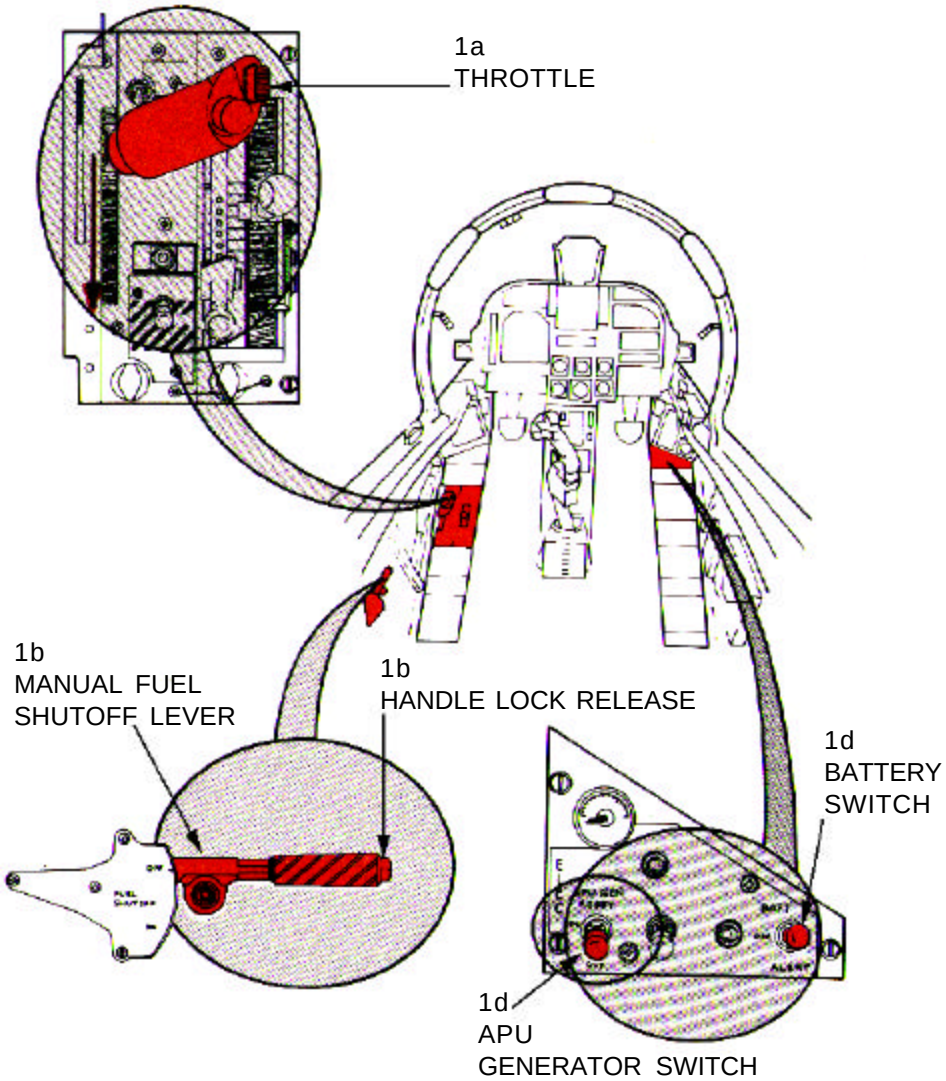

STENCIL SJU-4A/13/14 EJECTION SEAT

The STENCIL SJU-4A/13/14 is a catapult and rocket thrust ejection seat that provides support and necessary environmental equipment for crewmembers during flight, and a means of fast, safe escape during emergency flight conditions. The seat assembly incorporates features permitting seat ejection at ground level, at zero airspeed as well as during emergency flight conditions.

The basic structure of the seat consists of lightweight aluminum, built to withstand high G-loads, support all of the components, and form the main framework for the seat.

The basic components of the seat assembly include catapults, seat back rocket motors, gas powered inertia reel, parachute, survival equipment, and seat stabilization system.

This ejection seat presents definite hazards which may cause fatal injuries to uninformed and careless personnel. Firefighting/rescue personnel must become thoroughly familiar with the locations and the safetying of the seat components in both normal and emergency conditions.

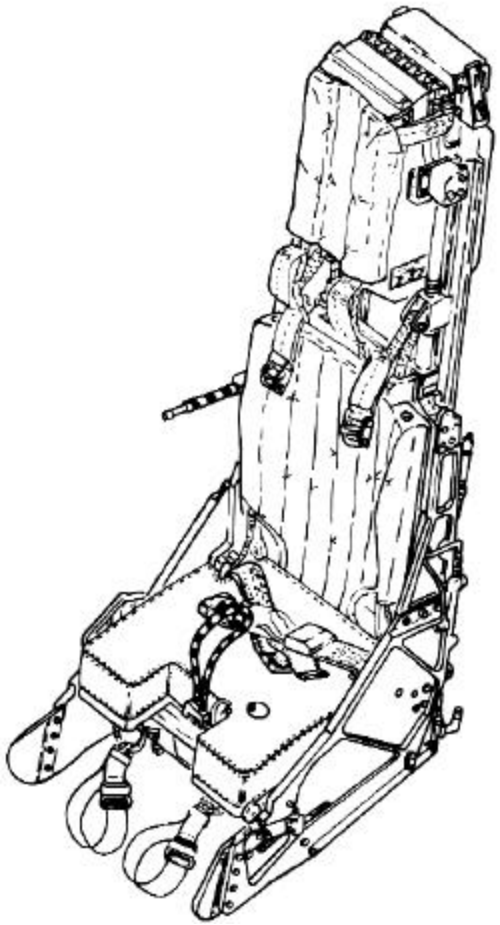

STENCIL SJU-4A/13/14 EJECTION SEAT SAFETYING

1. EJECTION SEAT SAFETYING NORMAL AND EMERGENCY

NOTE:
The AV-8B uses the SJU-4A seat and the TAV-8B uses two SJU-13/14 seats.

NOTE:
Immediately upon gaining access to the aircraft cockpit, if time permits and no hazardous conditions exist, proceed with seat safetying procedures.

a. Pull down and spring loaded end of the ground safety control handle and lift handle to the full up and locked position.

WARNING

Ground safety control handle must be in full up and locked postion to positively safety the seat. Seat will remain armed in any other position.

WARNING

In multi-seat aircraft, all ejection seats must be safetied due to command ejection possibility.

WARNING

When removing personnel from ejection seats, do not allow crewmembers or rescue personnel to become entangled in lower seat ejection handle.

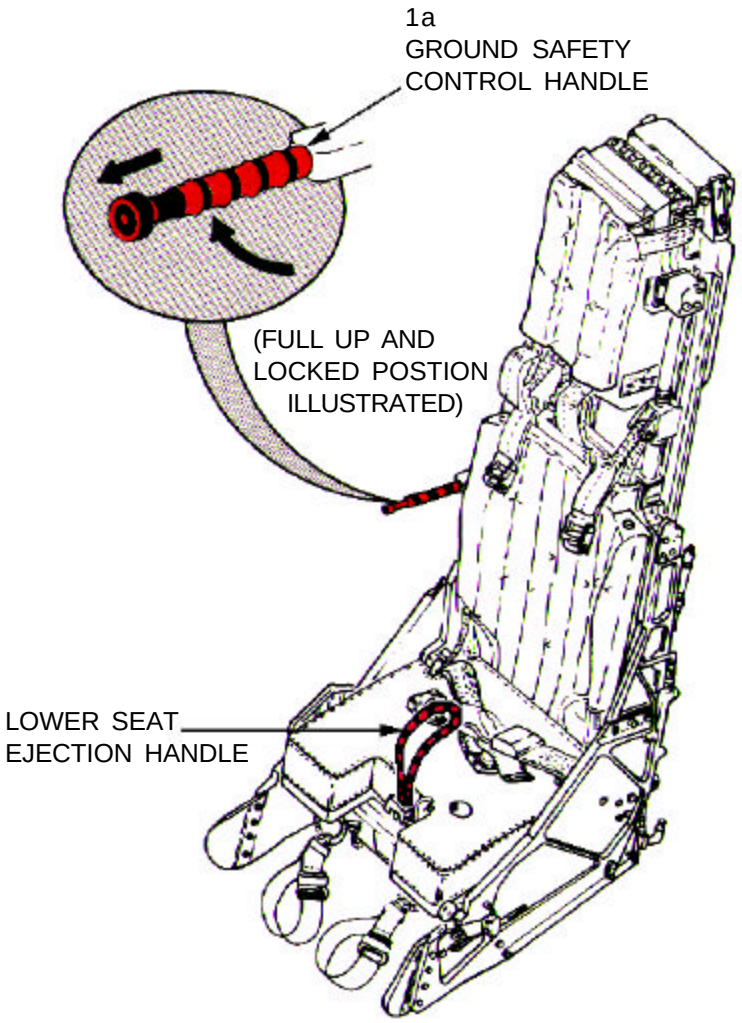

AIRCREW EXTRACTION

1. AIRCREW EXTRACTION

NOTE:
The pilot is attached to the seat by the use of an integrated harness. Additionally, the oxygen/ communication lead is connected to the seat pan. The anti-G suit hose is connected to an outlet on the left handl console.

a. To remove the oxygen mask: Pull down on release tabs on either side of mask.

b. To remove the oxygen/communication lead: Disconnect the lead from from the connection by pulling up on round collar while pulling apart the connection.

c. Disconnect the G-suit hose: Pull the anti-G suit hose from left hand console.

NOTE:
Leg garters are secured around legs by a quick disconnect. Leg restraint lines attach to garters using the same type of quick disconnect.

d. To disconnect leg garters: Apply pressure to both sides of the quick disconnect attaching leg restraint lines to garter (one each leg).

e. To disconnect remaining restraints: Release lap belt and two shoulder harness koch fitting.

2. EMERGENCY RELEASE

a. Squeeze and pull emergency restraint release handle, located on forward right hand side of seat, up and fully aft to locked position. This safeties the ejection initiation system and releases the inertia reel shoulder straps and leg restraints. However, the parachute and survival kit remain attached to the pilot. Repeating step 1e will release parachute and survival kit from crewmember.

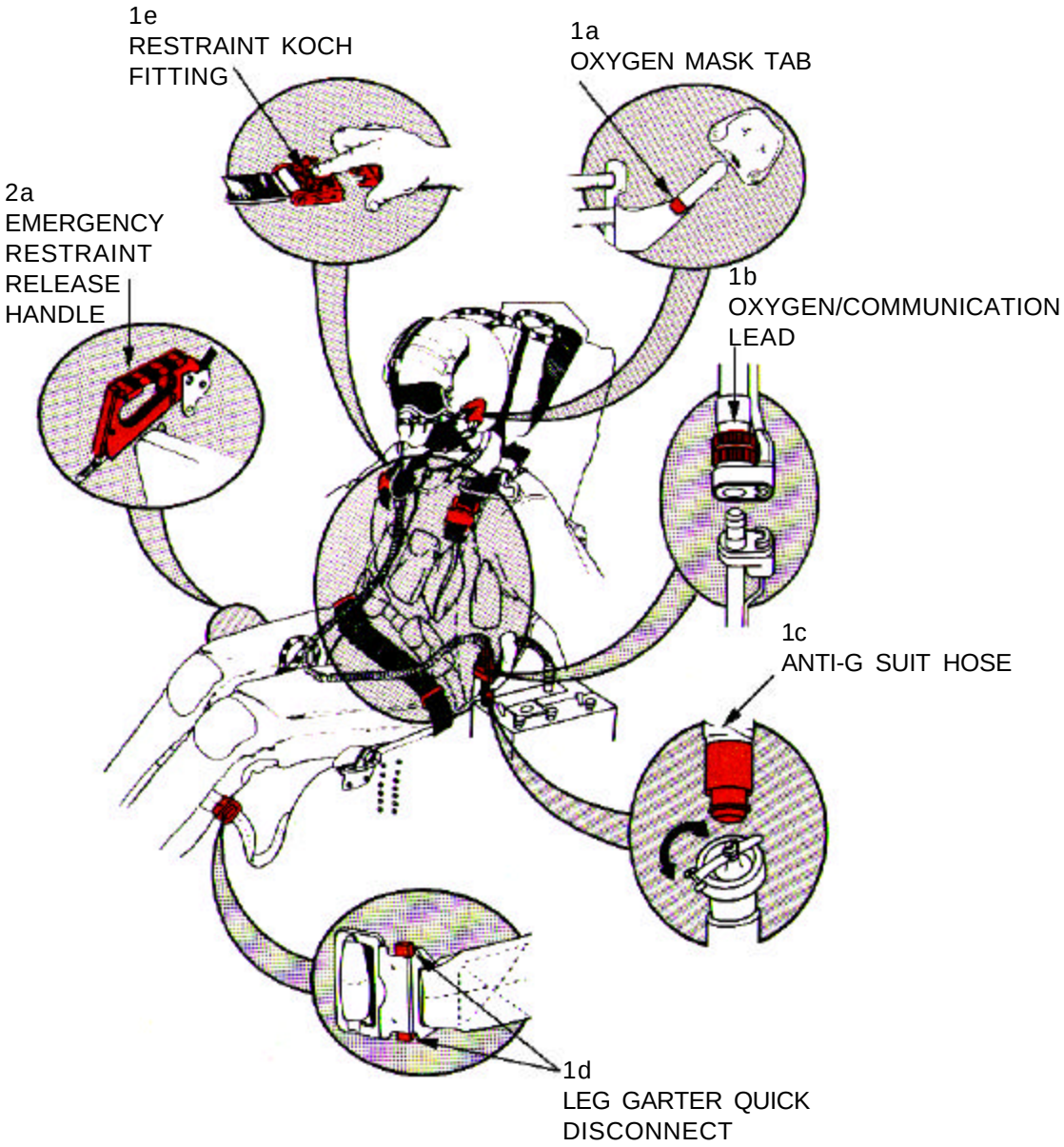

NOTE

Chapter 21 contains emergency rescue and
mishap response information for the following aircraft:

USN	**F-5E/F**
USN	**F-14/F-14+**
USN	**F/A-18A/B/C/D/E/F**

CHAPTER 21

U.S. NAVY

FIGHTER

AEROSPACE EMERGENCY RESCUE AND MISHAP RESPONSE INFORMATION

21-1. INTRODUCTION AND USE.

21-2. This section contains emergency rescue and mishap response information illustrations in alphanumerical order relative to type and model of aircraft. This arrangement of illustrations is maintained from Chapter 4 throughout the remainder of the publication.

21-3. GENERAL ARRANGEMENT.

21-4. Aircraft type designation has been positioned in the upper right corner of the horizontal illustration for rapid identification. Additional aids to rapid orientation are:

a. Recent technological advances in aviation have caused concern for the modern firefighter. Aircraft hazards, cabin configurations, airframe materials, and any other information that would be helpful in fighting fires, the locating and rescue of personnel will be added as the information becomes available.

b. Suggested special tools/equipment are listed in the upper left corner, on the Aircraft/Entry page of each listed aircraft.

c. Procedural steps covering emergency/normal entrances, cut-ins, engine/APU shutdown, safetying ejection/escape systems, and aircrew extraction are outlined on the left side of each page with coordinated illustrations on the right.

d. Illustrations located on right side of pages are coordinated with text by numerals and small letters depicting both paragraph and subparagraph on the page.

e. Each illustration is consistently colored and/or pattern keyed to highlight essential emergency rescue information.

f. Details are pulled directly from the illustration to highlight an area, thus eliminating unnecessary searching for desired information.

NOTE:

The US Navy F-5E/F is the same as the USAF F-5E/F. Refer to Chapter 8, pages F-5.1 thru F-5.6 for complete procedures.

AIRCRAFT PAINT SCHEME

AIRCRAFT DIMENSIONS

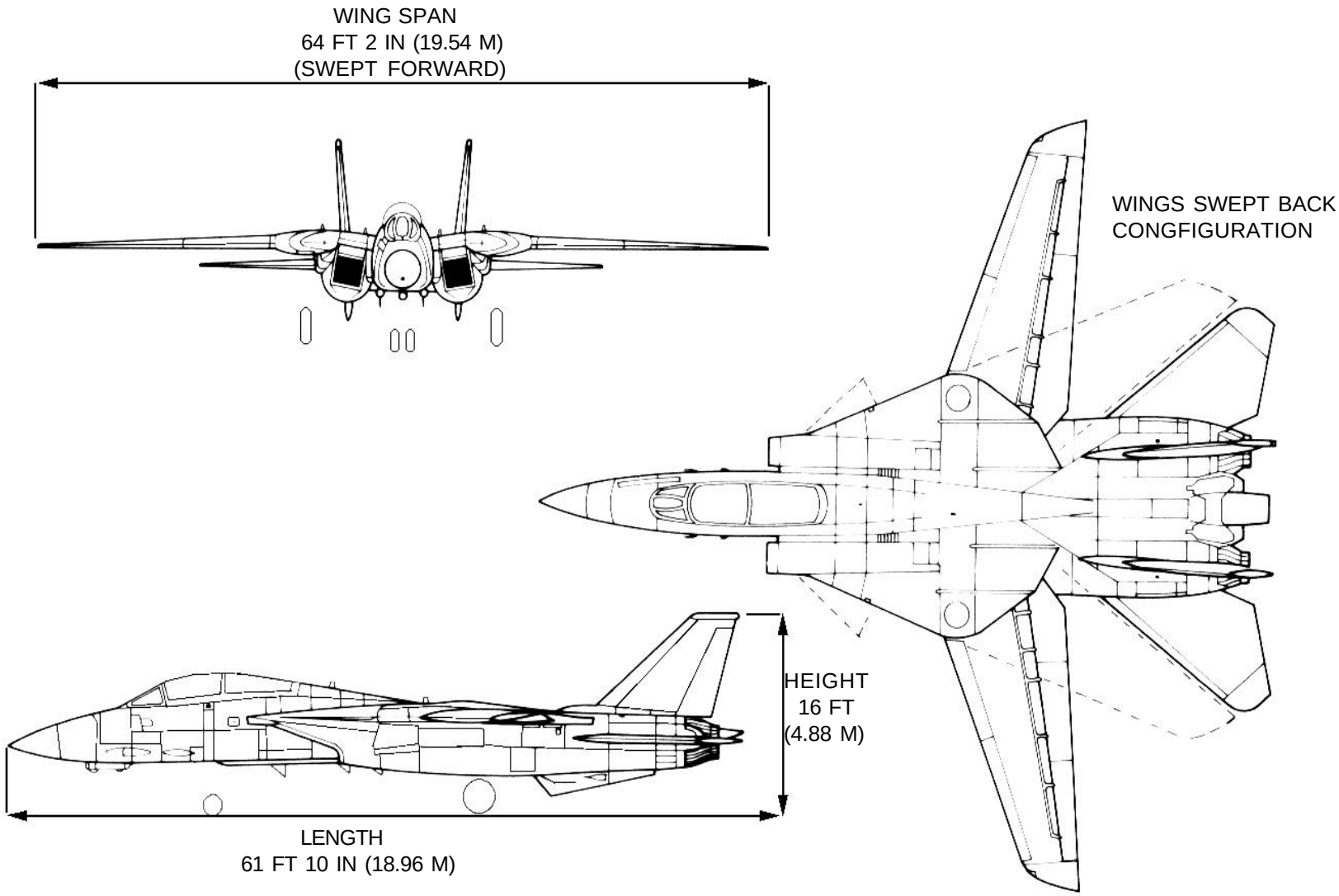

AIRCRAFT HAZARDS

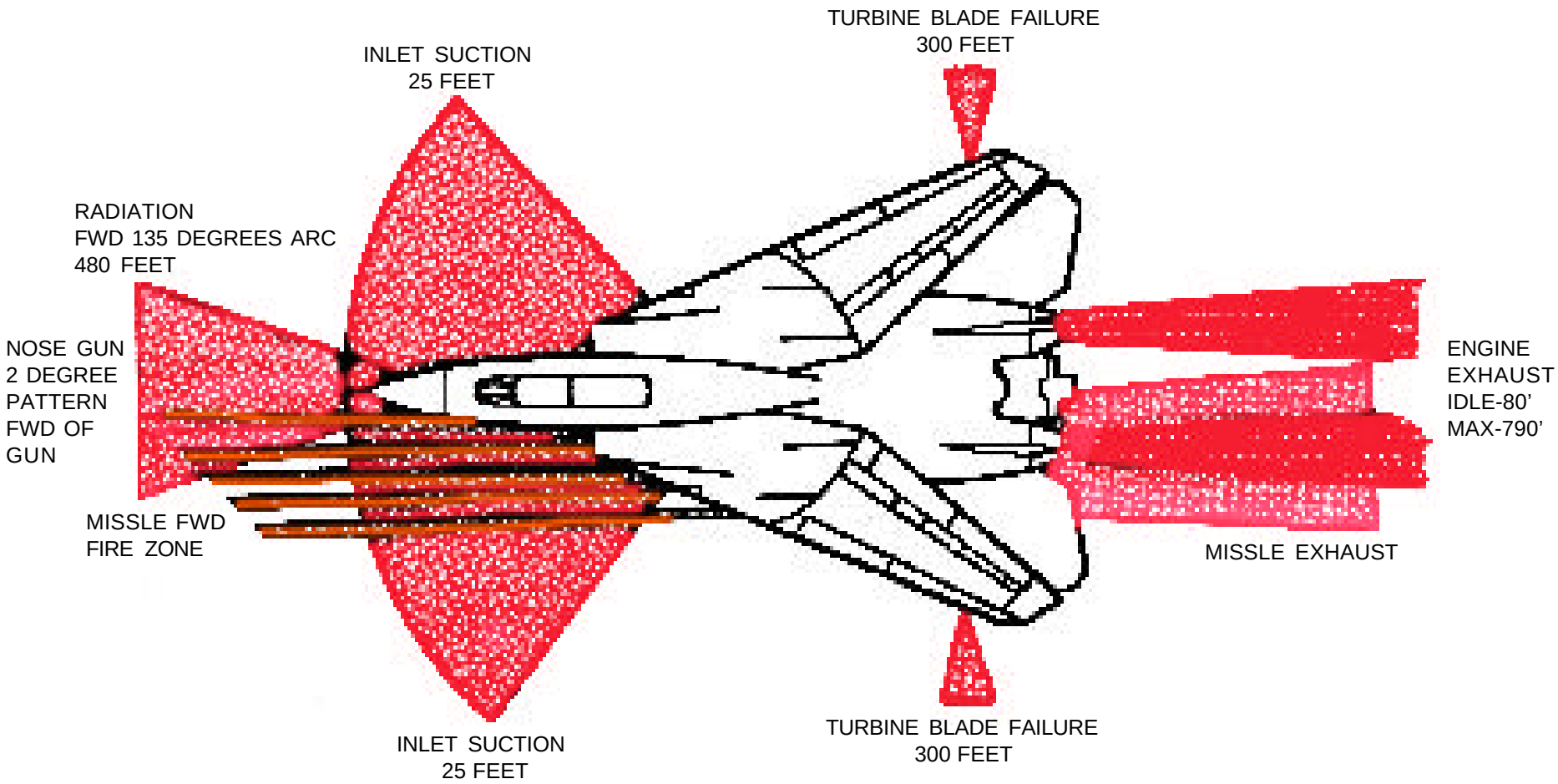

AIRCRAFT HAZARDS-Continued

ARMAMENT LOCATIONS

WARNING

Wing and fuselage stations have pylon ejector cartridges.

WARNING

In the event of wheels-up landing, secure all electrical power to ensure armament system safety.

NOTE:
In normal wheels down landing, ground wheels down switches, and safety the armament systems.

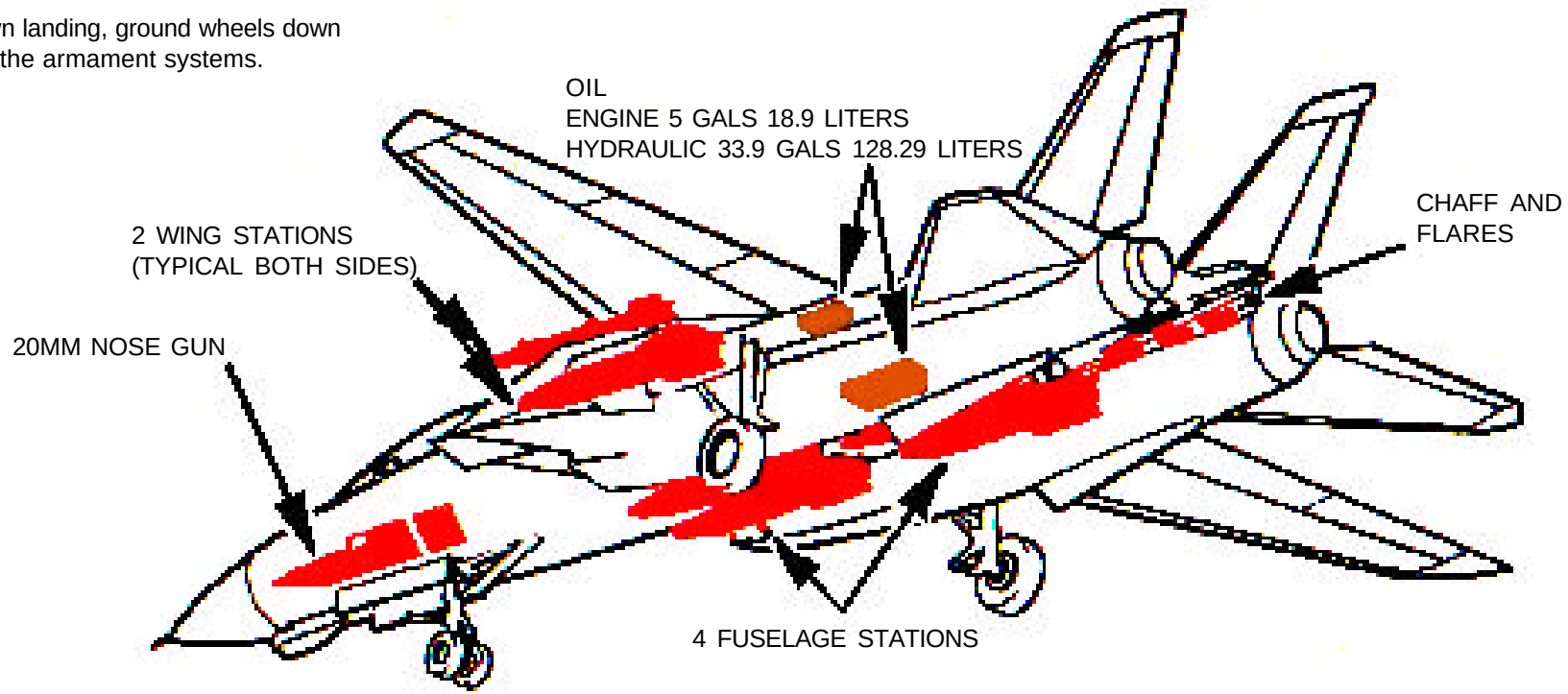

AIRFRAME MATERIALS

LEGEND

- ALUMINUM
- STEEL
- TITANIUM
- OTHER (BORON/TUNGSTEN/FIBERGLASS)

COMPONENT COMPOSITION (TOTAL WEIGHT 1163.5 LBS):

a. Horizontal Stabilzation Skins are boron and weigh approximately 65 each = 260 lbs
b. Composite Over Wing Fairing are graphite and weigh approximately 327.2 each = 654.4 (These are being replaced with conventional OWF with no composites)
c. Ventral Fins are Fiber Glass and weigh 69.5 each = 139lbs
d. Radome is Fiber Glass and weighs approximately 105.1lbs
e. Nose Landing Gear fwd doors are Fiber Glass and weigh approximately 5 lbs

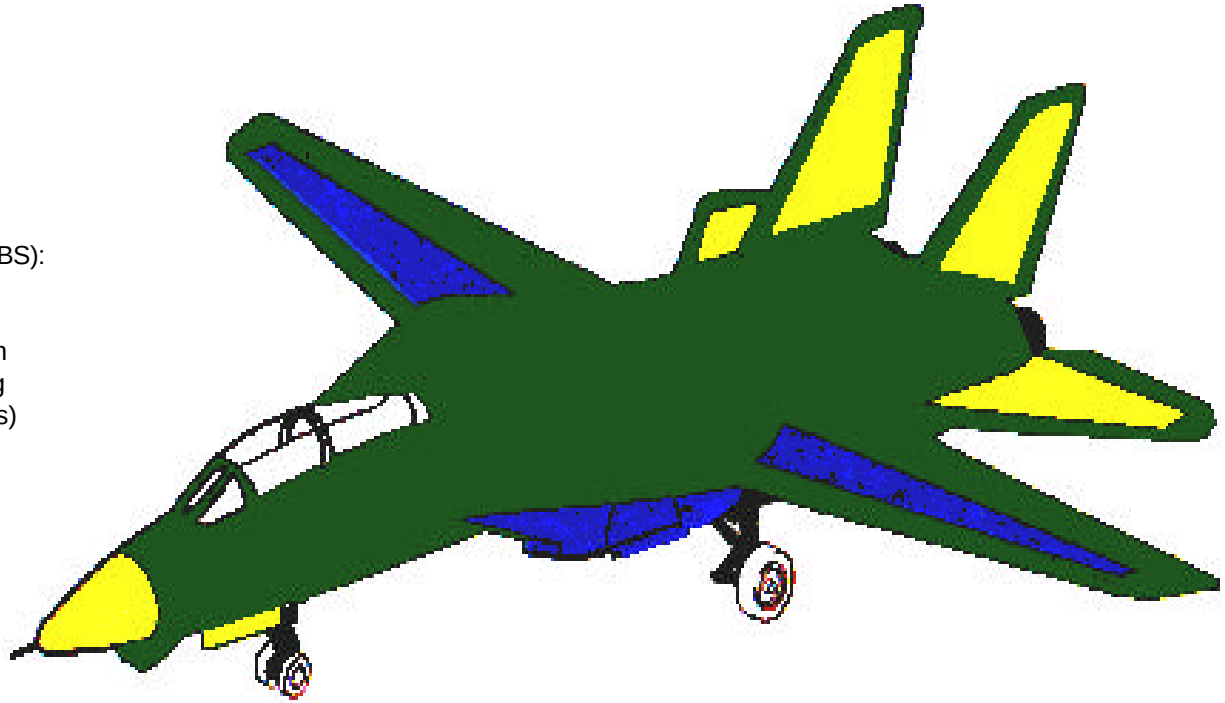

SPECIAL TOOLS/EQUIPMENT
Power Rescue Saw
10 Inch Drift Punch
Crash Ax
Fire Drill II

AIRCRAFT ENTRY

WARNING

FOD in area of backup initiator, located on turtle deck aft of RIO seat may become entangled with initiator pin. This may cause pin extraction and seat ejection when canopy is raised. Visually check area for FOD prior to raising canopy.

WARNING

Do not jettison canopy with fuel in cockpit area. Fire or explosion may result. The canopy trajectory when jettisoned, is up and aft. Ensure personnel and equipment are clear of area immediately to the rear of the aircraft.

1. NORMAL ENTRY

a. Open access hatch on bottom of boarding ladder panel, pull and turn handle to the NORM OPEN position. Once canopy is opened, rotate handle to HOLD.

b. Two additional positions may be selected by turning the canopy selector handle to AUX OPEN or BOOST.

2. EMERGENCY ENTRY

a. Push button to open door. Squeeze T-handle and pull to jettison canopy.

NOTE:

Canopy may be jettisoned from either side of the aircraft under pilot's cockpit marked "RESCUE".

3. CUT-IN/FORCED ENTRY

a. Canopy is acrylic plastic and may be cut with a power rescue saw or crash ax. Cut along canopy frame on all four sides.

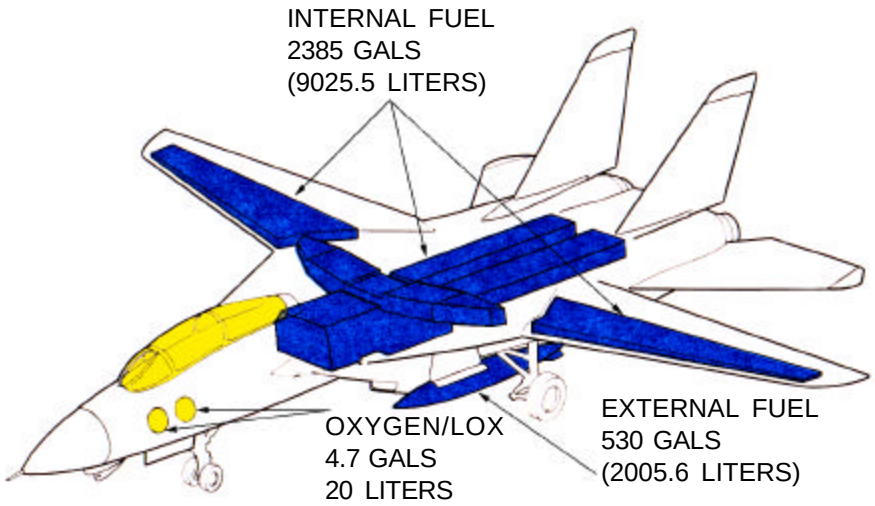

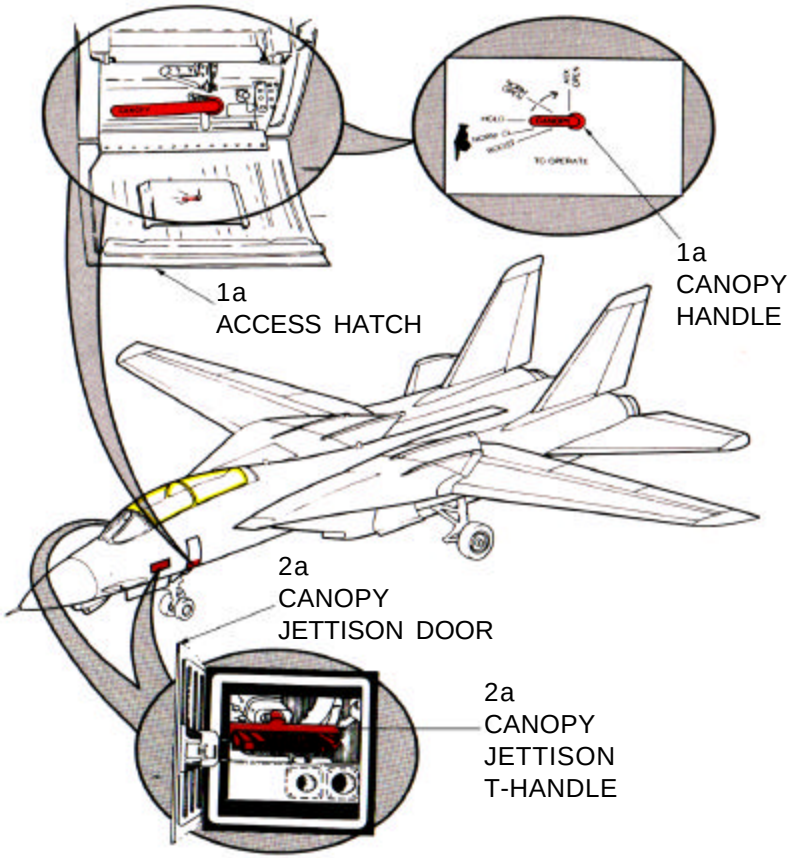

CANOPY SAFETY AND ENGINE SHUTDOWN

1. CANOPY SAFETY

NOTE:
Canopy is pneumatic and hydraulically operated for normal opening and closing. During emergency, the canopy can be jettisoned by a pneumatic and pyrotechnic initiator device.

a. To safety canopy, insert safety pin into backup initiator, located on turtle deck aft of RIO seat.

2. ENGINE SHUTDOWN

NOTE:
Engines may be shut down by throttles or fuel shutoff valves.

a. Move throttles (left throttle first) full aft to OFF position by retarding through IDLE position, then outboard.

b. Pull left and right fuel shutoff valves, located on pilot's center instrument panel, under glare shield.

c. Place master generator switches down in OFF position.

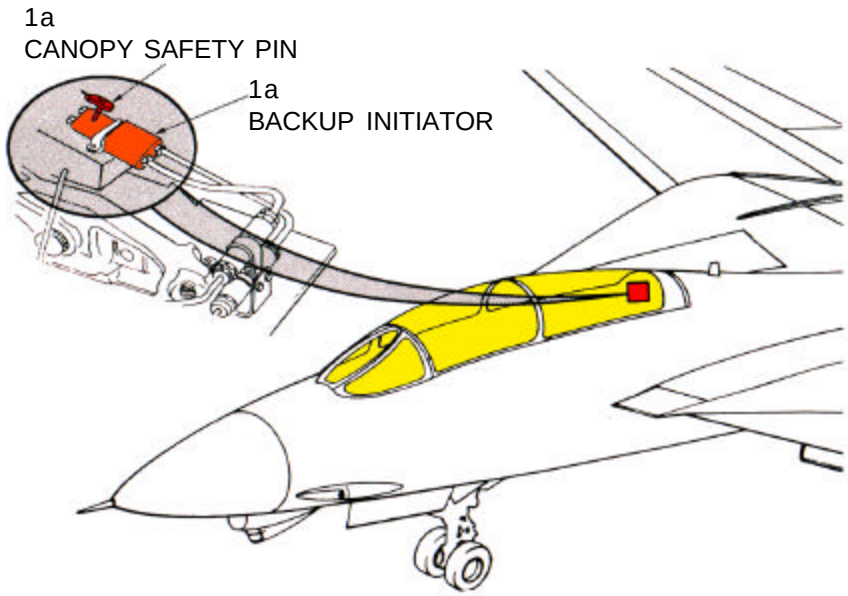

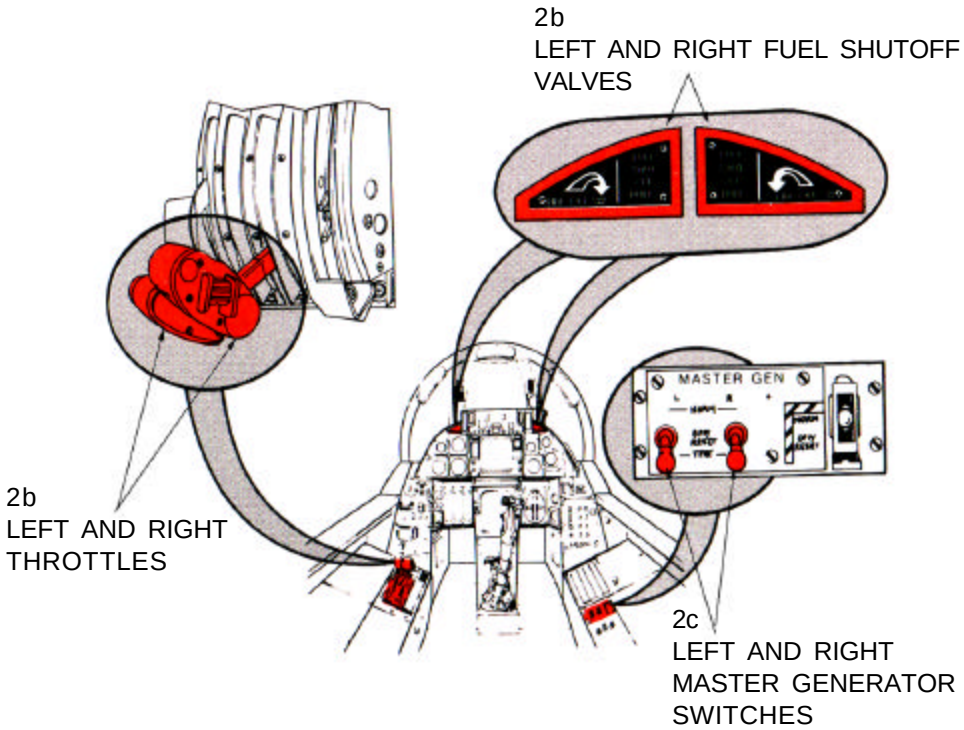

MARTIN-BAKER MK GRU-7A EJECTION SEAT

1. GENERAL INFORMATION

The Martin-Baker MK GRU-7A is a rocket assisted ejection seat that provides support and necessary environmental equipment for crewmembers during flight, and a means of fast, safe escape during emergency flight conditions. The seat assembly incorporates features permitting seat ejection at ground level, at zero airspeed as well as during emergency flight conditions.

The basic structure of the seat consists of a main beam assembly, built to withstand high G-loads, support all of the components, and form the main framework for the seat.

The basic components of the seat assembly include a catapult, gas powered inertia reel, rocket motor, seat bucket assembly, drogue gun, parachute, guillotine, and survival equipment.

This ejection seat presents definite hazards which may cause fatal injuries to uninformed and careless personnel. Firefighting/rescue personnel must become thoroughly familiar with the locations and the safetying of the seat components in both normal and emergency conditions.

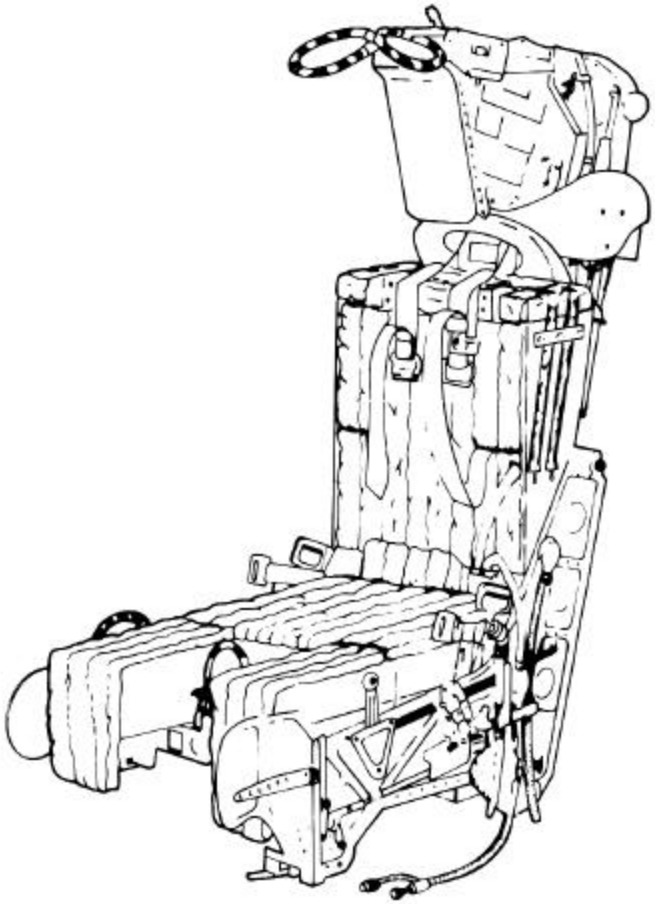

EJECTION SEAT SAFETYING

1. NORMAL EJECTION SEAT SAFETYING

NOTE:
Immediately upon gaining access to the aircraft cockpit, if time permits and no hazardous conditions exist, proceed with normal seat safetying procedures.

a. Place safety flag for face curtain, located on top forward of seat, in UP/LOCKED position.

b. Rotate lower firing handle guard, located lower center of seat, to UP/LOCKED position.

c. Insert ejection gun safety pin into ejection gun sear, located top aft of seat.

d. Insert safety pin into systems initiator, located top back of seat (install pin from aft side of initiator).

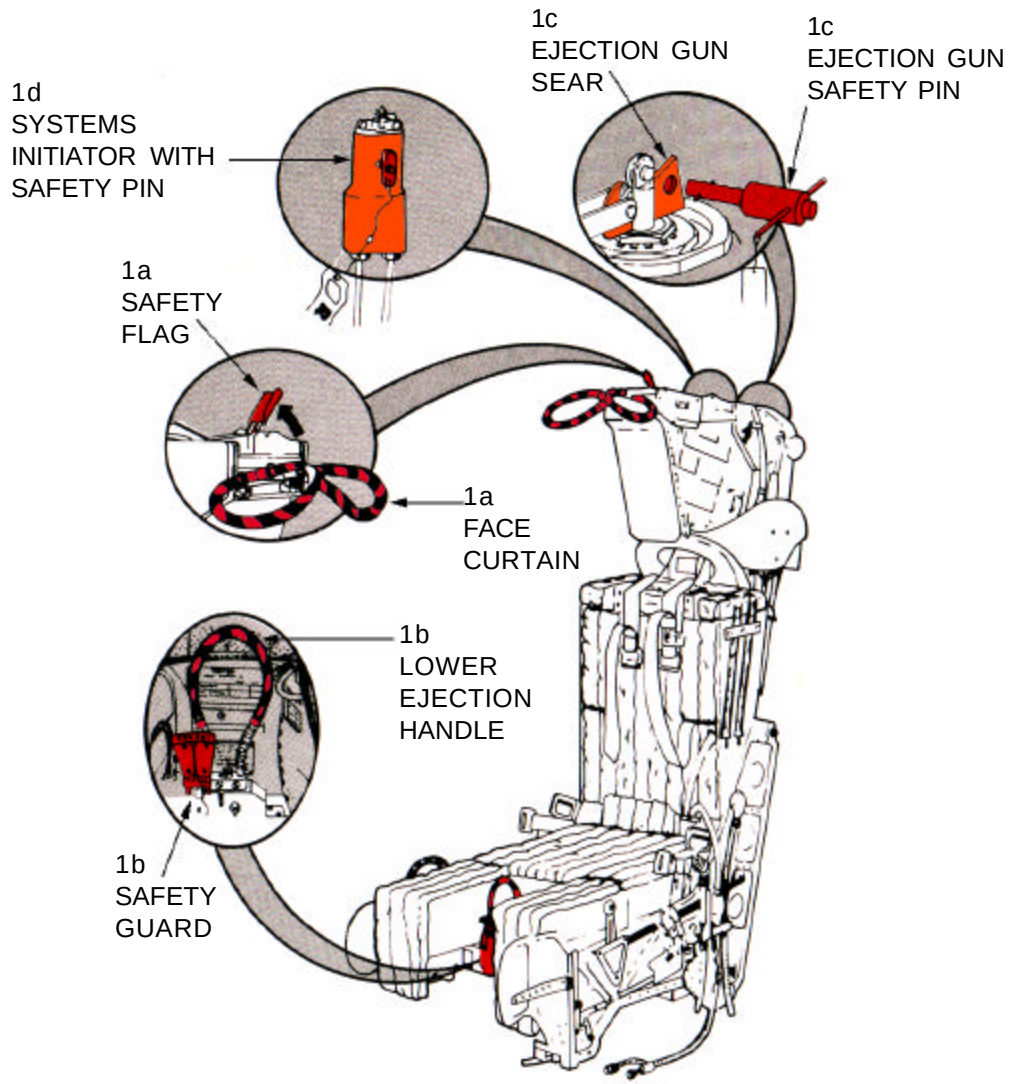

EJECTION SEAT SAFETYING- Continued

1. NORMAL EJECTION SEAT SAFETYING- Continued

e. Insert safety pin into drogue gun sear, located on upper left side of seat.

f. Insert safety pin into rocket gas generator sear, located on upper left side of seat forward and above the drogue gun.

g. After removing crewmember, insert lock assembly into emergency release handle, located on forward right side of seat.

WARNING

In multi-seat aircraft, all ejection seats must be safetied due to command ejection possibility.

WARNING

When removing personnel from ejection seats, do not allow crewmembers or rescue personnel to become entangled in lower seat ejection handle or use face curtain handle as a support or hand hold.

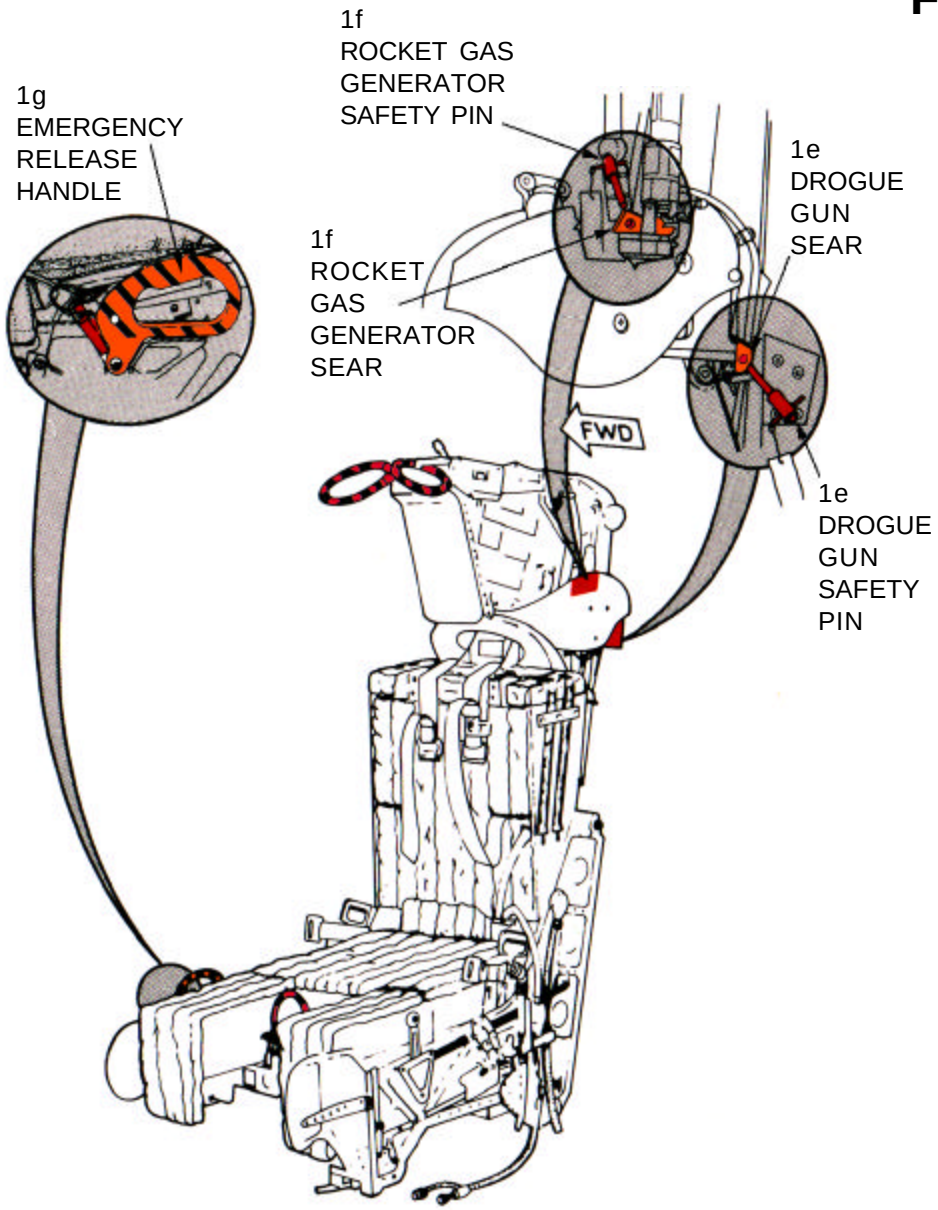

EJECTION SEAT SAFETYING- Continued

1. EMERGENCY EJECTION SEAT SAFETYING

NOTE:
The MARTIN-BAKER MK GRU-7A ejection seat presents special hazards to rescue personnel. Safetying the entire seat under emergency conditions may not be feasible. To temporarily render seat safe for the removal of disabled crewmembers, comply with the following:

a. Place safety flag for face curtain, located on top forward of seat, in UP/LOCKED position.

b. Rotate lower firing handle guard, located lower center of seat, to UP/LOCKED position.

c. Insert ejection gun safety pin into ejection gun sear, located top aft of seat.

WARNING

In multi-seat aircraft, all ejection seats must be safetied due to command ejection possibility.

WARNING

When removing personnel from ejection seats, do not allow crewmembers or rescue personnel to become entangled in lower seat ejection handle or use face curtain handle as a support or hand hold.

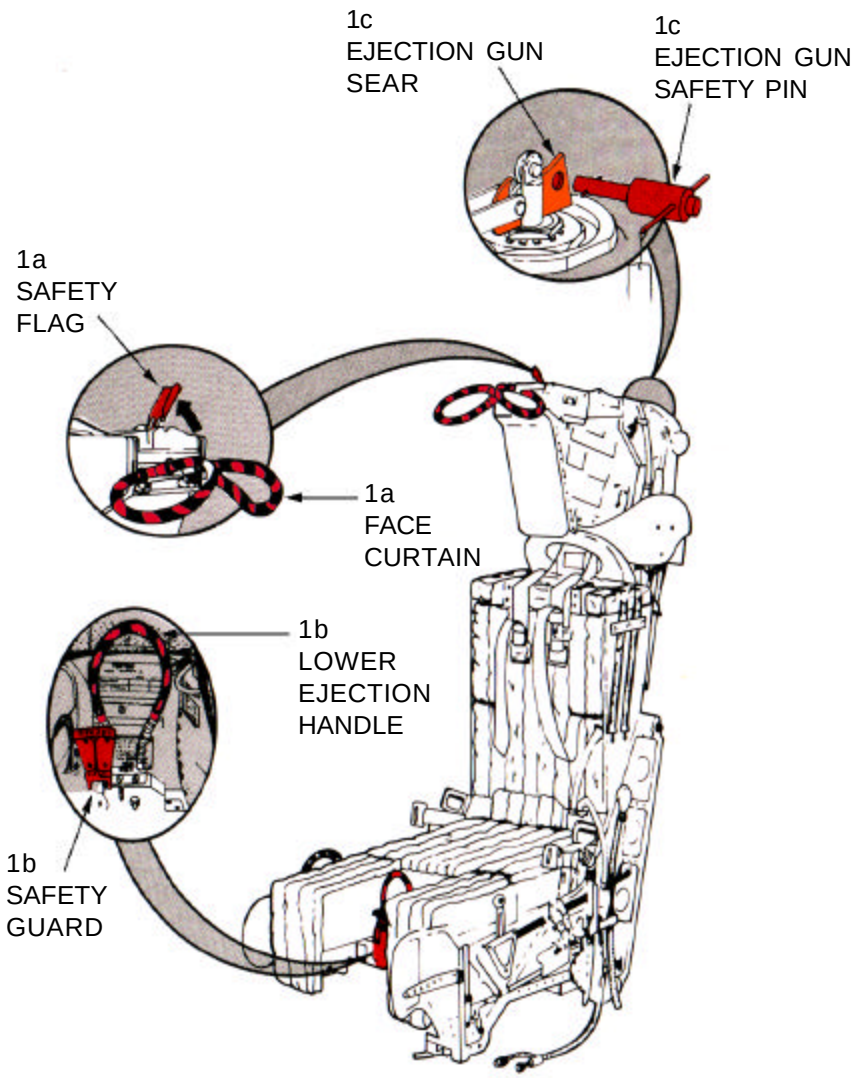

AIRCREW EXTRACTION

1. AIRCREW EXTRACTION

NOTE:
The crewmembers are attached to the seat by the use of an integrated harness and leg restraints. Additionally, the oxygen/communication lead and anti-G suit hose are attached to the personnel services block.

a. To remove oxygen mask: Pull down release tabs on either side of crewmember helmet mask.

b. To disconnect the oxygen/communication lead outlet from the services block on the left side of seat: Pull up on round collar while pulling apart connection.

c. To disconnect the anti-G suit: Pull anti-G suit hose from left seat connection.

d. To disconnect leg restraints: Pull each leg restraint line “D” ring from the leg garter quick disconnect.

e. To disconnect restraints: Release two lap belt, then two shoulder harness koch fittings.

2. EMERGENCY RELEASE

a. Actuating the emergency restraint release handle will free the crewmember from the seat and “safes” the upper and lower ejection handles when pulled to the aft position. How ever, the parachute and survival kit will remain attached to crewmember.

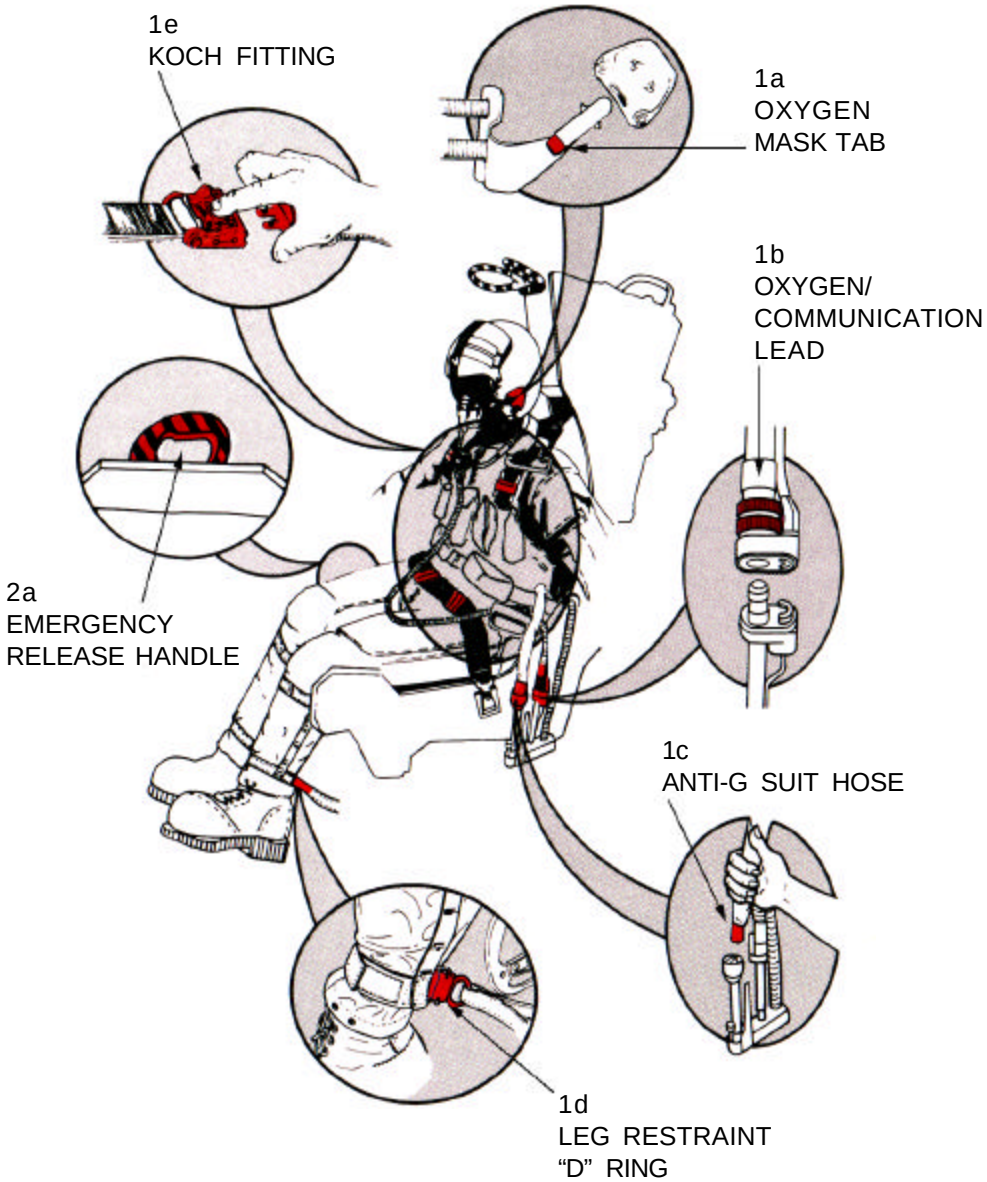

AIRCRAFT PAINT SCHEME FOR A/F-18A/B/C/D

AIRCRAFT PAINT SCHEME FOR A/F-18E/F

AIRCRAFT DIMENSIONS

EFFECTIVITY: F/A-18A/B/C/D

NOTE:

The F/A-18 A and C are single seat models while the F/A-18B and D are two seat models.

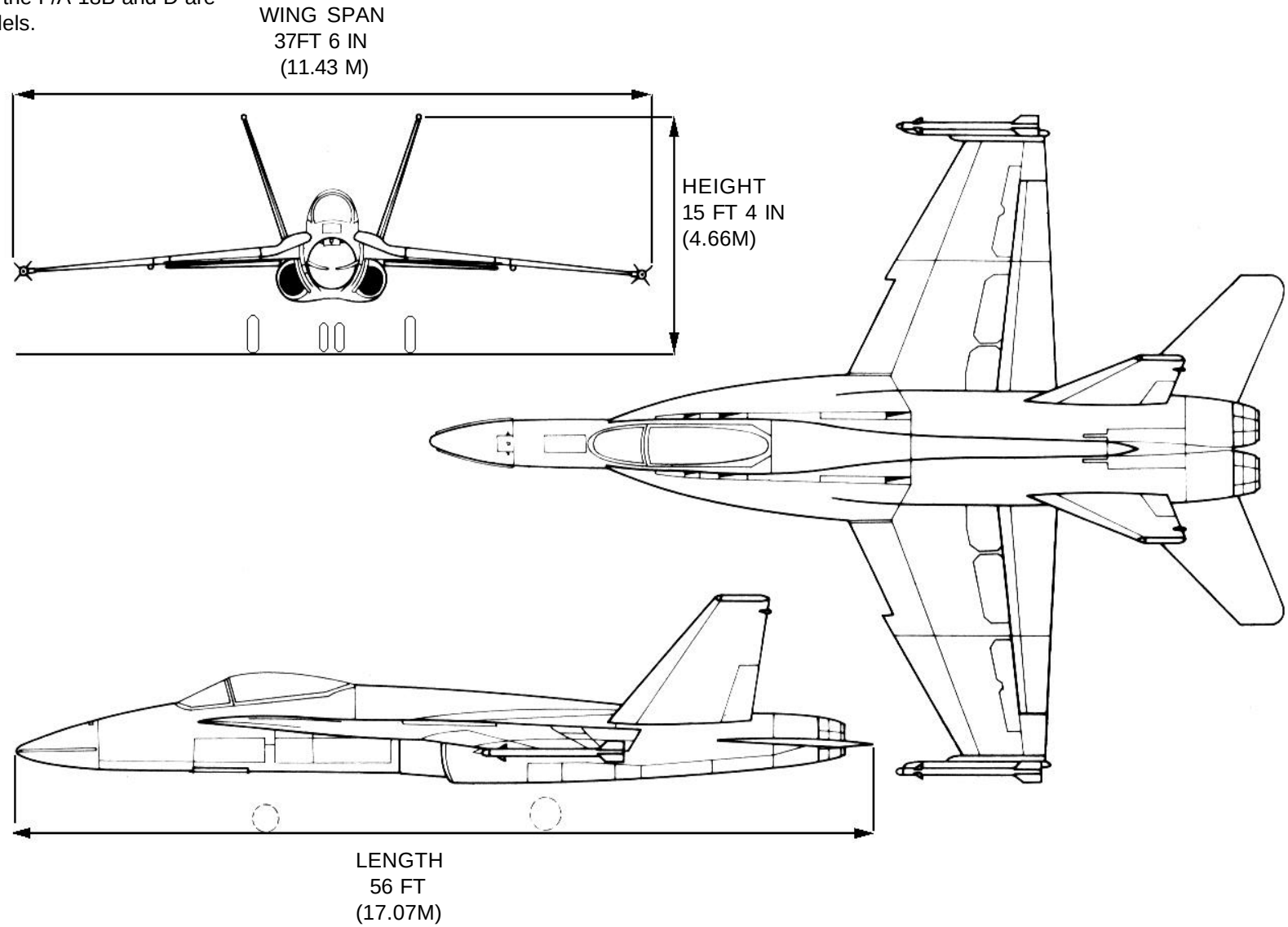

AIRCRAFT DIMENSIONS-Continued

EFFECTIVITY: F/A-18E/F

NOTE:
The F/A-18E is single seat model while the F/A-18F is a two seat model.

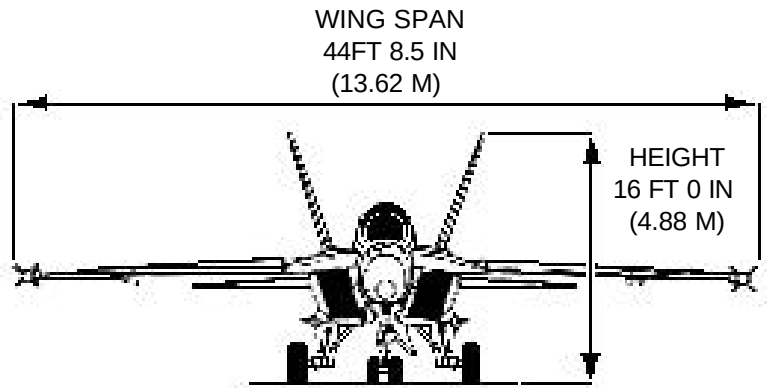

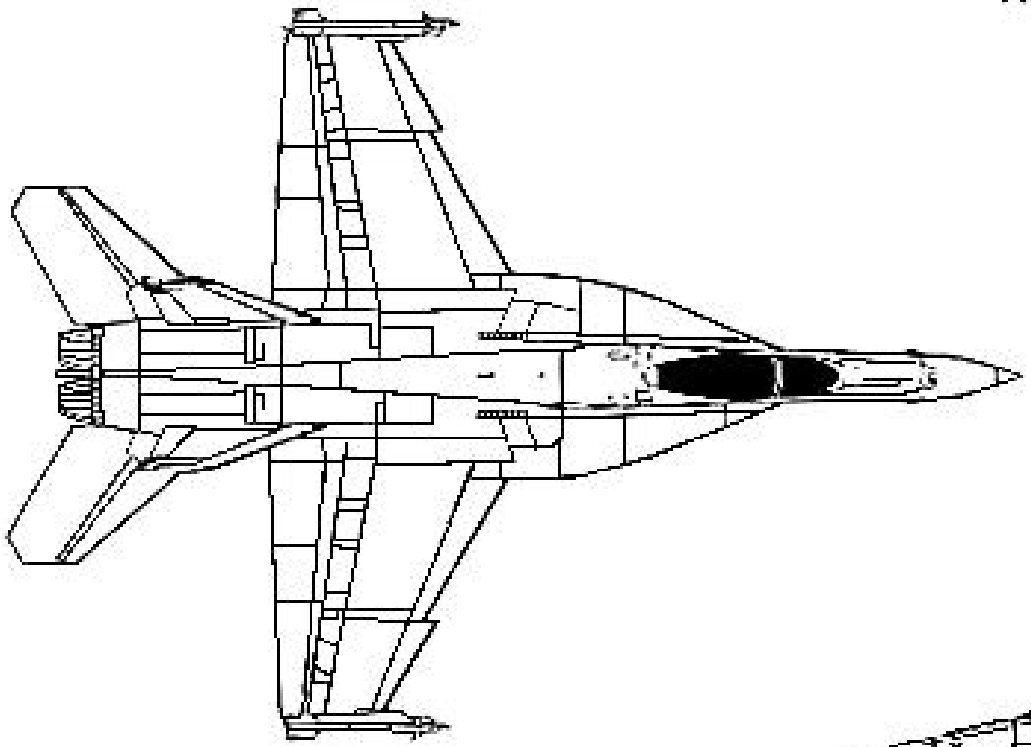

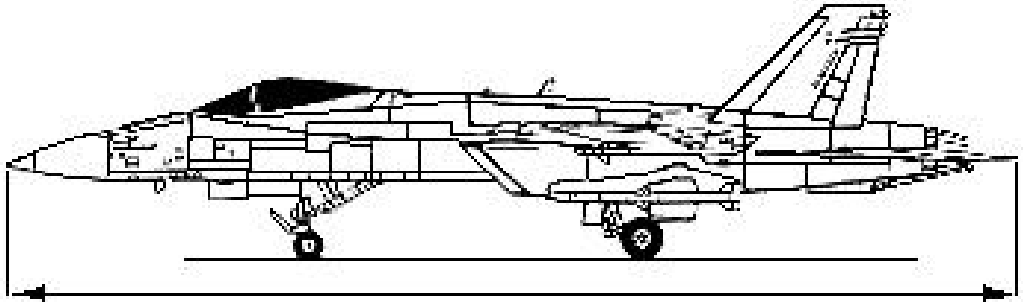

LENGTH
60 FT 3.5 IN
(18.38 M)

AIRCRAFT HAZARDS

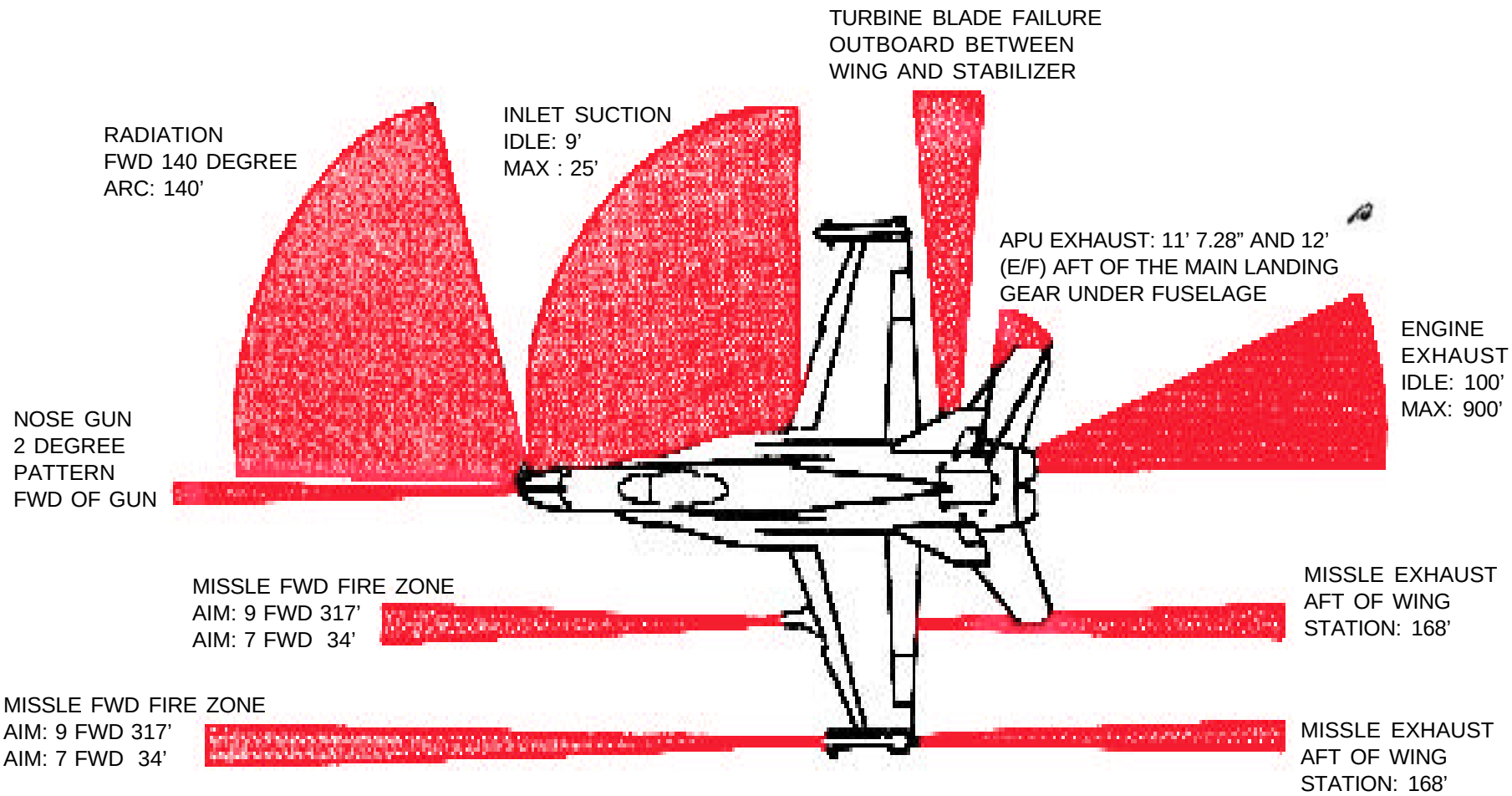

AIRCRAFT HAZARDS-Continued

NOTE:

In normal wheels down landing, ground wheels down switches safety the armament systems.

WARNING

Aircraft has chaff and flares installed. Pylons have ejector cartridges installed.

NOTE:

On aircraft 164196 and up, including E/F version, Deployable Flight Incident Recorder Set (DFIRS). The DFIRS comprises the following components:

(1) TLX thin-layered transfer system
(2) Impact initiator and cartridge
(3) Underwater initiator and cartridge
(4) Severable door
(5) Front mount and cartridge
(6) Deployable flight incident recorder

NOTE:

DFIRS deploys under the following conditions:

(1) Ejection: DFIRS is deplyed immediately upon initiation of ejection.

(2) Crash (without ejection): DFIRS is deployed when the impact initiator senses 20 G's (longitudinal).

(3) Water submersion (without ejection): DFIRS is deployed when aircraft is deployed when aircraft is submerged is greater than 15 feet of water without sufficient longitudinal impact force for crash initiation (approximately 100 kts).

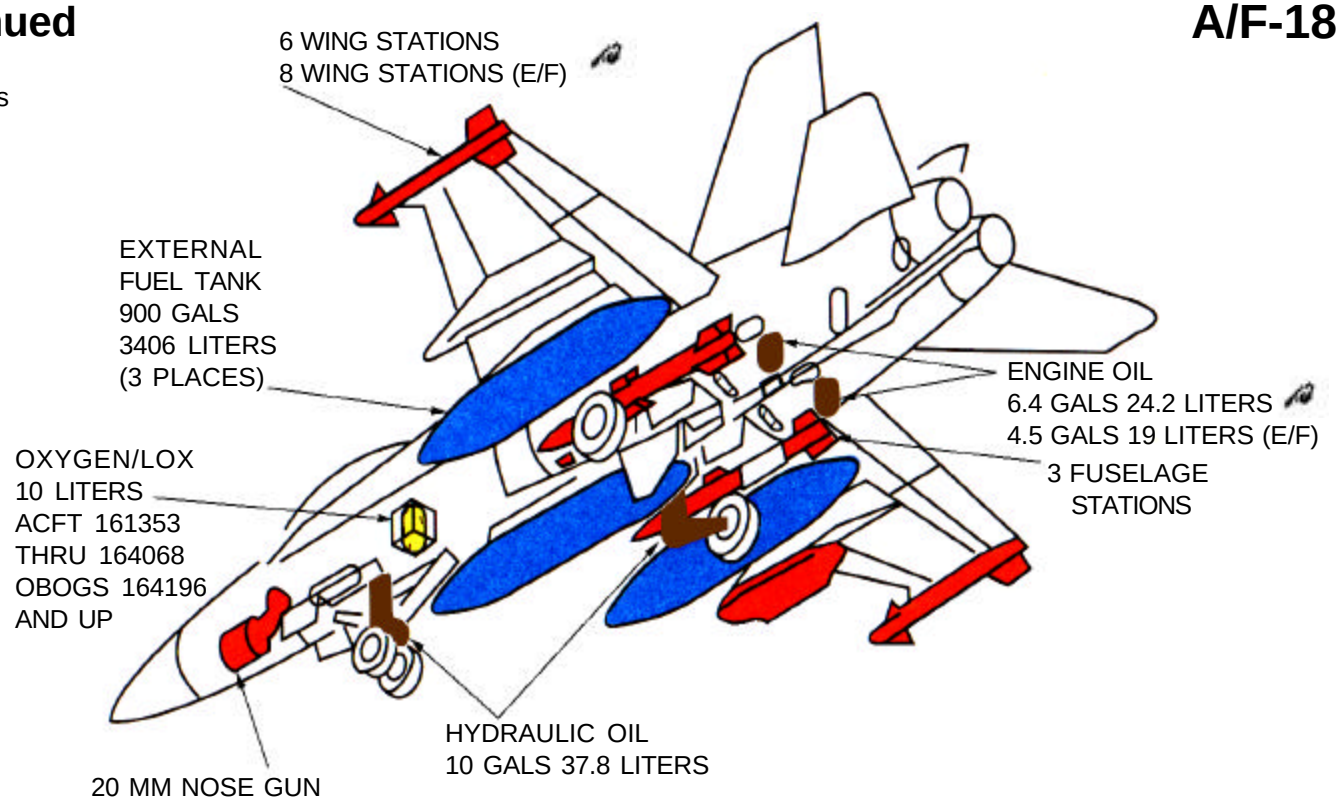

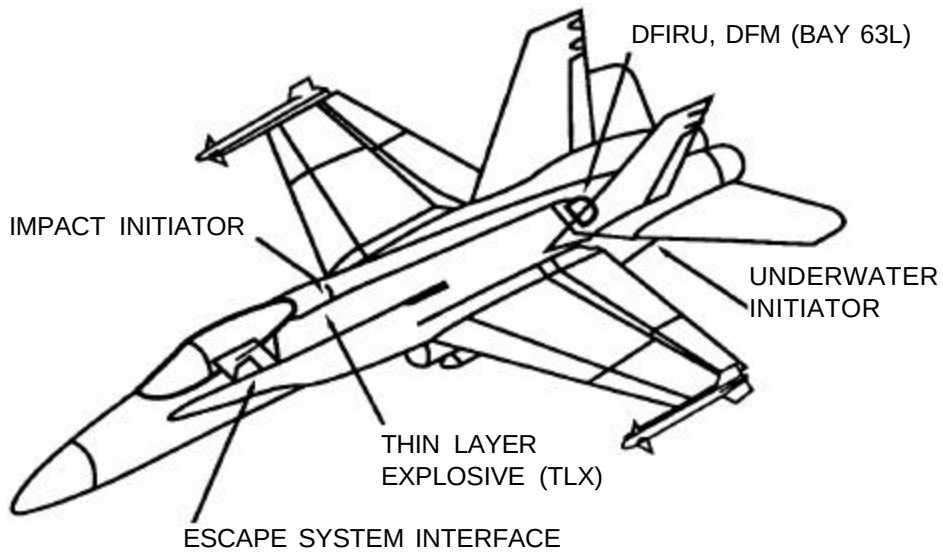

AIRCRAFT ARMAMENT

ARMAMENT - F/A18A/B/C/D
One M61A1/A2 Vulcan 20mm cannon

EXTERNAL PAYLOAD:
AIM 9 Sidewinder, AIM 7 Sparrow, AIM-120 AMRAAM, Harpoon, Harm, SLAM, SLAM-ER, Maverick missiles; Joint Stand-Off Weapon (JSOW); Joint Direct Attack Munition (JDAM); various general purpose bombs, mines and rockets.

ARMAMENT - F/A-18E/F

NOTE:
The F/A-18E/F models has additional weapon stations in comparison to the F/A-18C/D totalling 11.

One M61A1/A2 Vulcan 20mm cannon

EXTERNAL PAYLOAD:
AIM Sidewider, AIM-9X (projected), AIM 7 Sparrow, AIM-120 AMRAAM, Harpoon, Harm, SLAM, SLAM-ER (projected), Maverick missiles;Joint Stand-Off Weapon JSOW); Joint Direct Attack Munition (JDAM); Data Link Pod; Paveway Laser Guided Bomb; various general purpose bombs, mines and rockets.

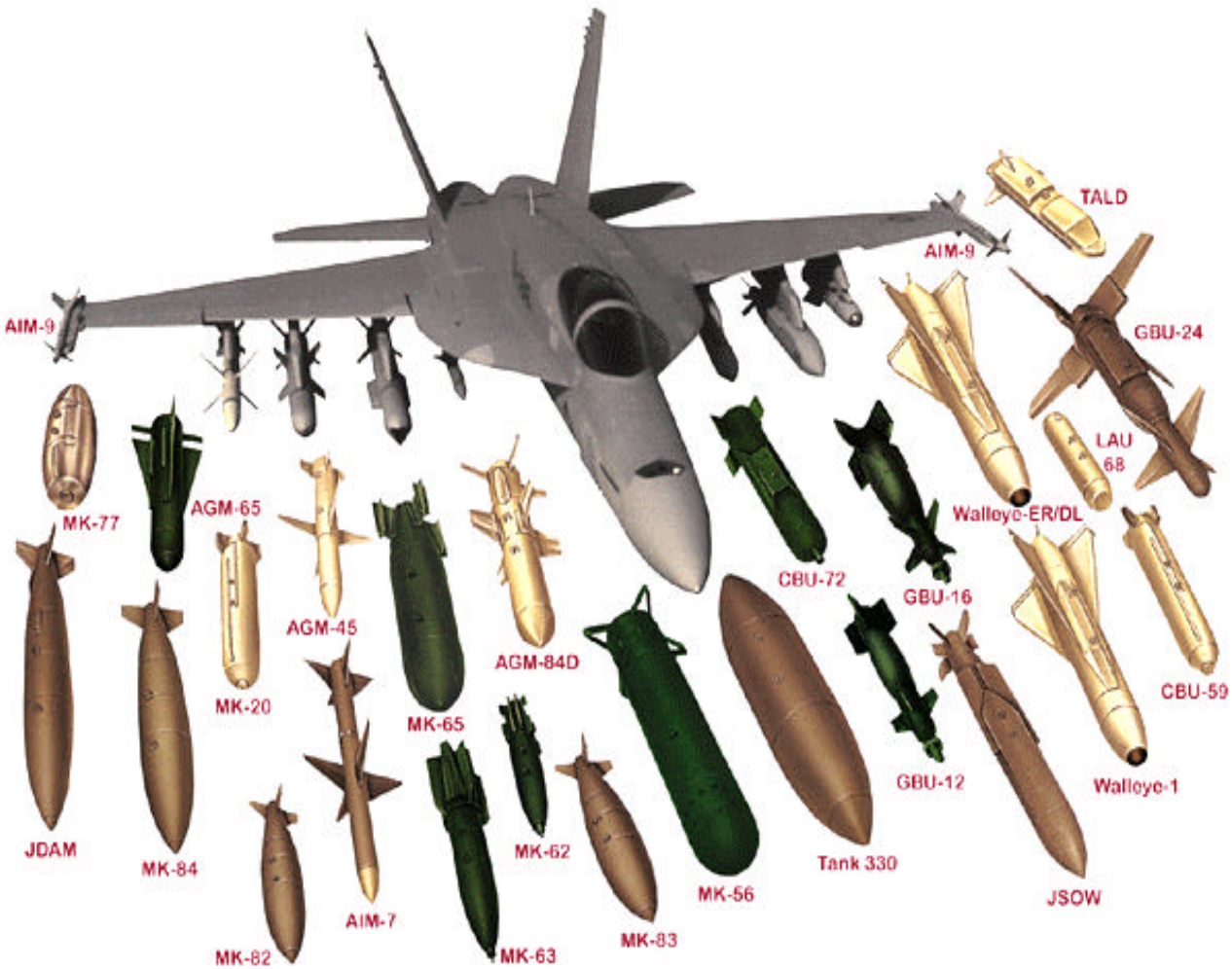

AIRFRAME MATERIALS

LEGEND

- ALUMINUM
- STEEL
- TITANIUM
- GRAPHITE EPOXY
- OTHER
  BORON/TUNGSTEN/FIBERGLASS

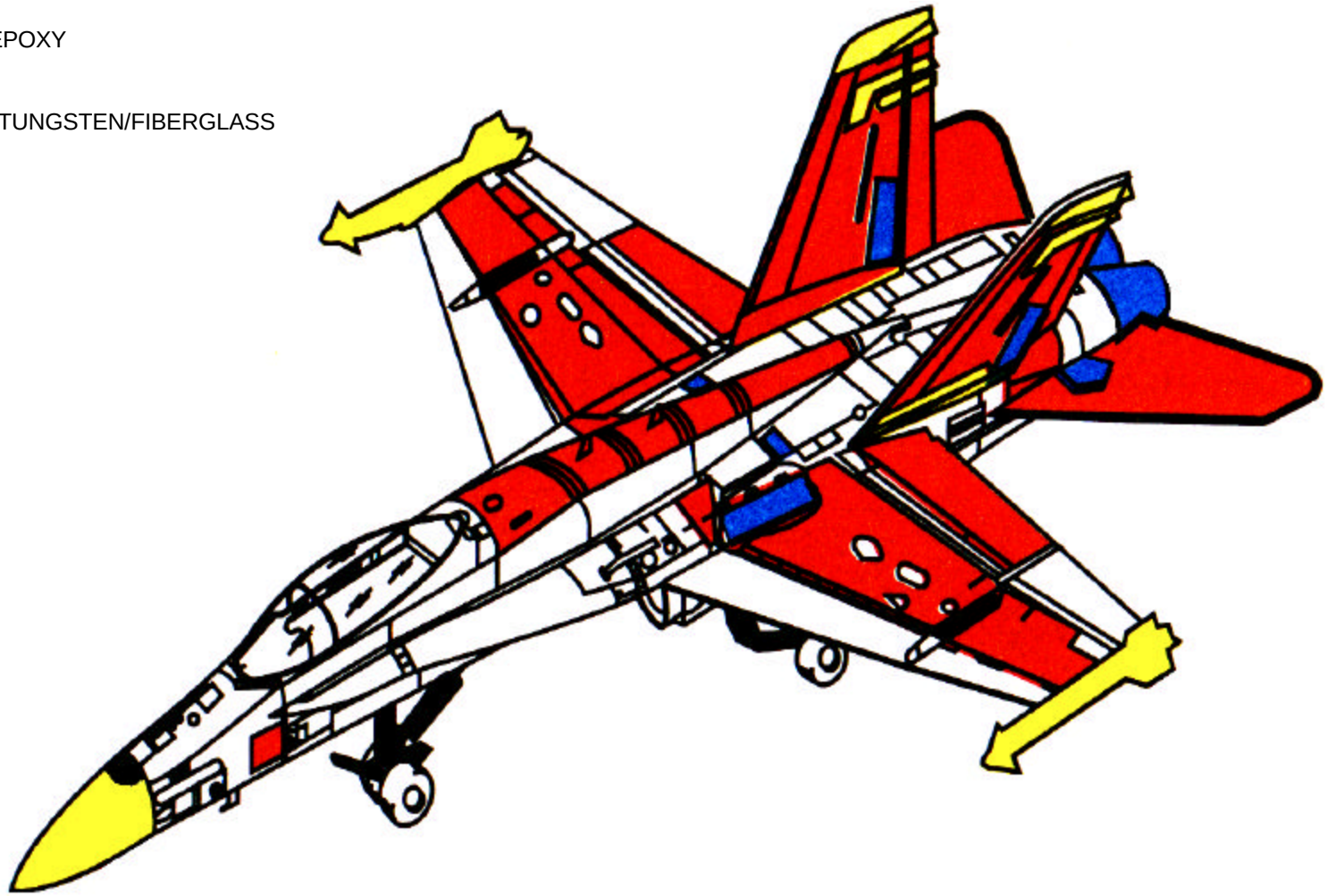

SPECIAL TOOLS/EQUIPMENT
Power Rescue Saw
Crash Ax Fire Drill II
3/8 Inch Drive Socket Wrench
1/4 Inch Drive Socket Wrench
7/32 Inch Key Socket Headscrew

AIRCRAFT ENTRY-ALL MODELS

WARNING

After flight, before personnel can safely touch the windshield and canopy, high voltage static discharged by using anti-static gloves.

1. NORMAL ENTRY

a. Canopy is electronically operated. To open canopy, press center button to release door 9 and expose the control switch. Hold switch in UP position until canopy is fully open.

2. MANUAL ENTRY

a. Canopy can be opened by inserting 3/8-inch drive socket wrench or breaker bar into manual open socket. Rotate counterclockwise 35 turns or 112 turns on 2 seat models to fully open canopy.

3. EMERGENCY ENTRY

WARNING

If fuel or other flammable fluids are present, it is not advisable to jettison canopy because rocket motors, when fired, can ignite these fluids.

a. Canopy may be jettisoned from either side of aircraft. Open door 5L or 5R and remove handle. Move away from aircraft the full length of canopy jettison cable and yank hard. Canopy will impact approximately 30 feet behind aircraft.

NOTE:
On aircraft 162826 and up, canopy can only be jettisoned from inside the cockpit.

4. CUT-IN/FORCED ENTRY

a. Canopy is acrylic plastic and may be cut with power rescue saw or ax. To avoid canopy fracture spray with CO_2 to make brittle and easy to break. Cut along canopy frame, all four sides.

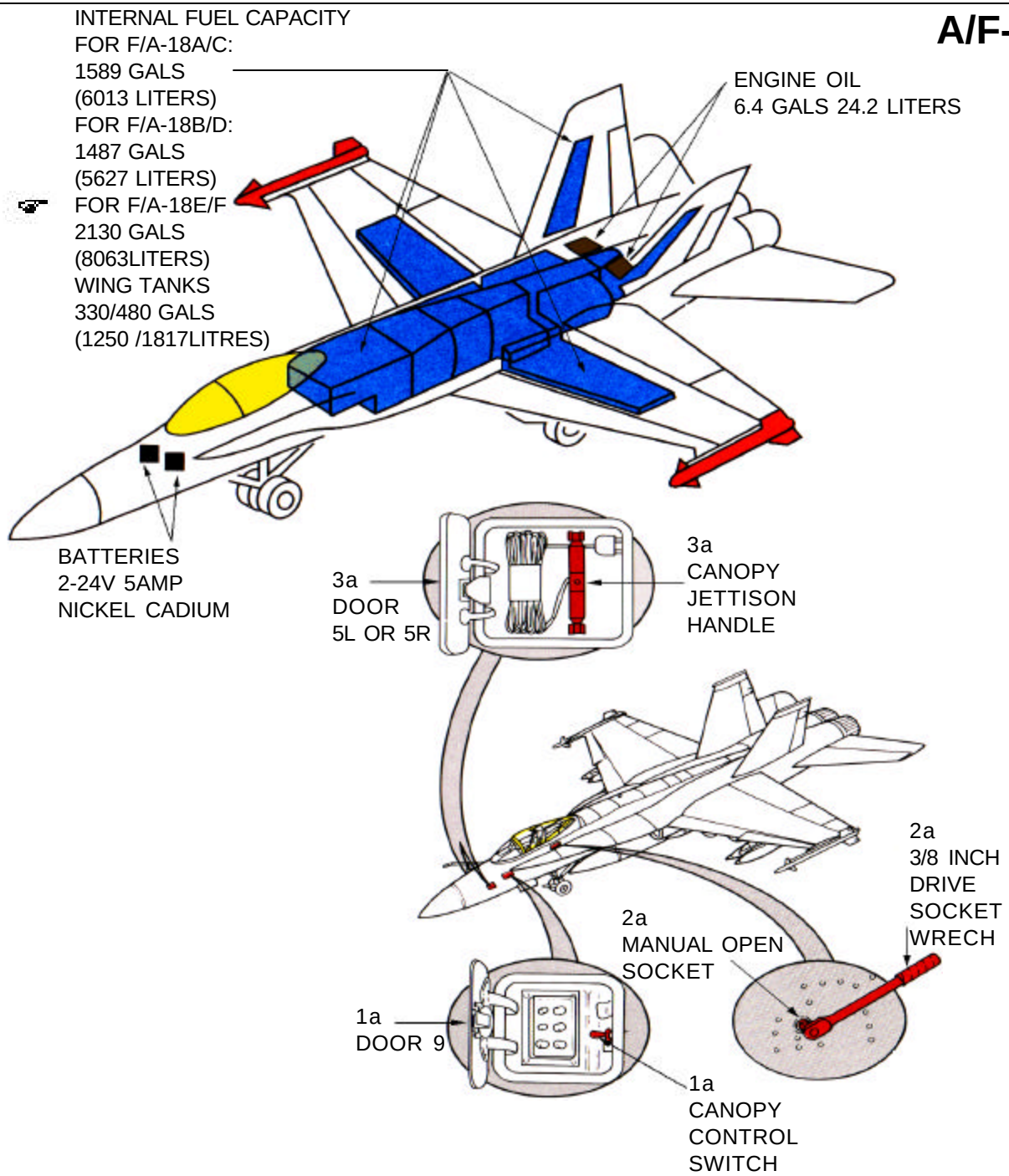

CANOPY SAFETY

1. CANOPY SAFETY FOR F/A-18A/B/C/D

WARNING

During flight of the F-18 aircraft, a high voltage (100,000 volts) static electrical charge may build up and be stored in the windshield and canopy. After flight, static charge buildup must be discharged using anti-static gloves (PN SG-200-93-y-F150), before personnel can safely touch the windshield and canopy.

WARNING

Canopy has dual rocket motors mounted on canopy frame. With canopy open, rescue personnel may be seriously injured if rocket motors are ignited.

a. To safety canopy unlatch thruster and canopy rocket motors, insert safety pin, if available, into canopy jettison handle. Use safety pin for applicable model.

NOTE:
Insert safety pin with canopy jettison handle in forward position.

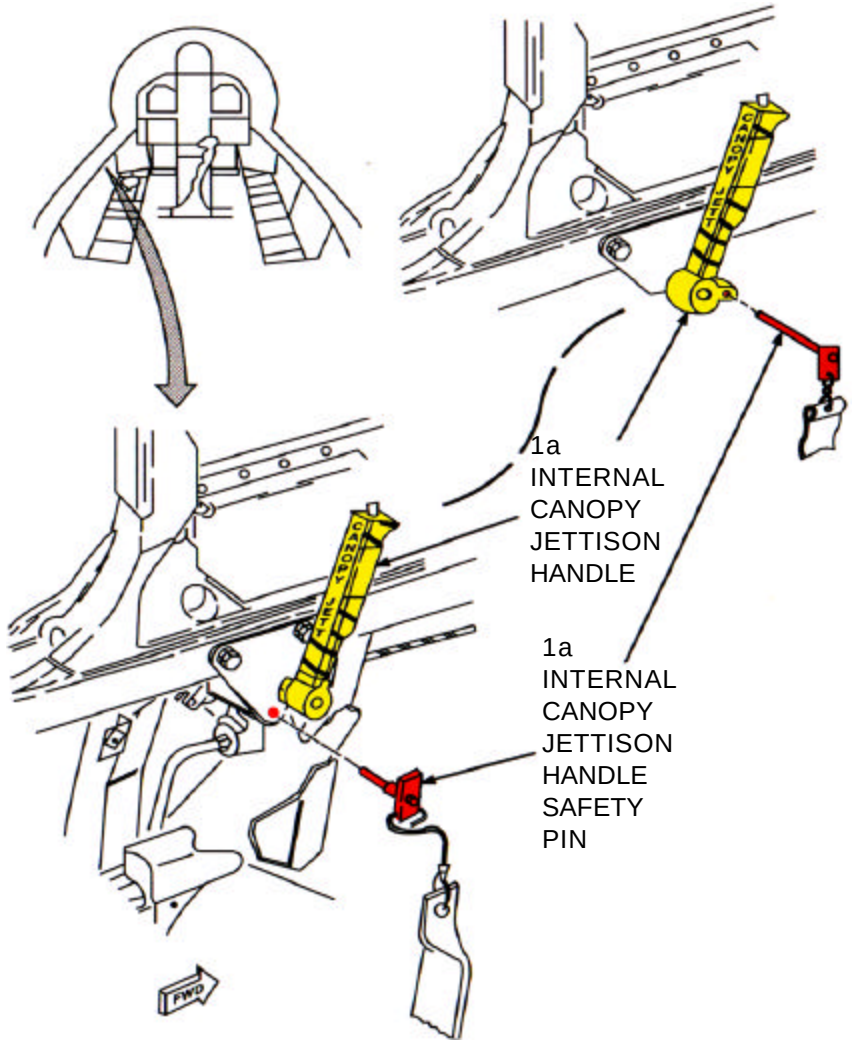

CANOPY SAFETY-Continued

1. CANOPY SAFETY FOR F/A-18A/B/C/D-Continued

b. Grasp quick disconnect hose, located at canopy behind ejection seat, and pull down to disconnect the emergency escape disconnect. This disarms the canopy thruster and rocket motors. Use quick disconnect for applicable model.

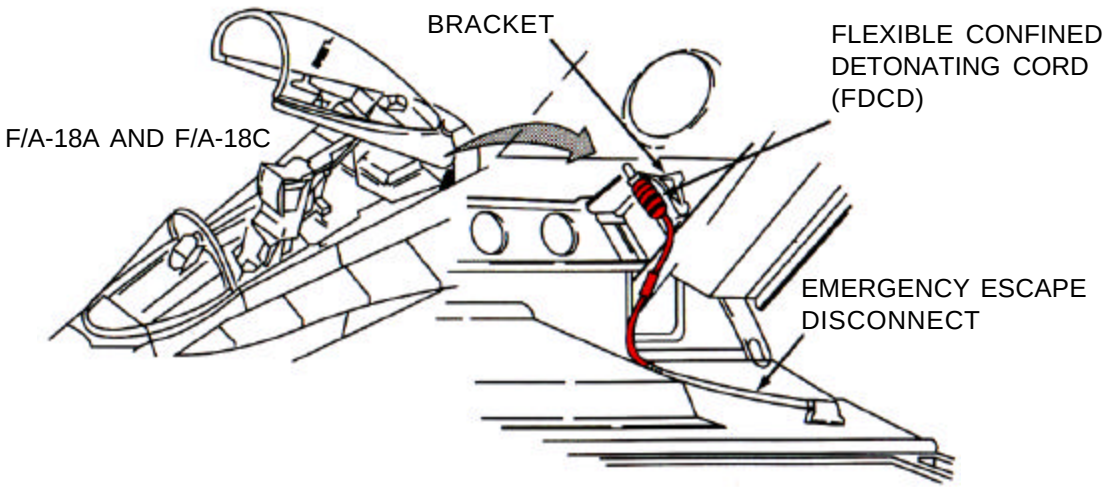

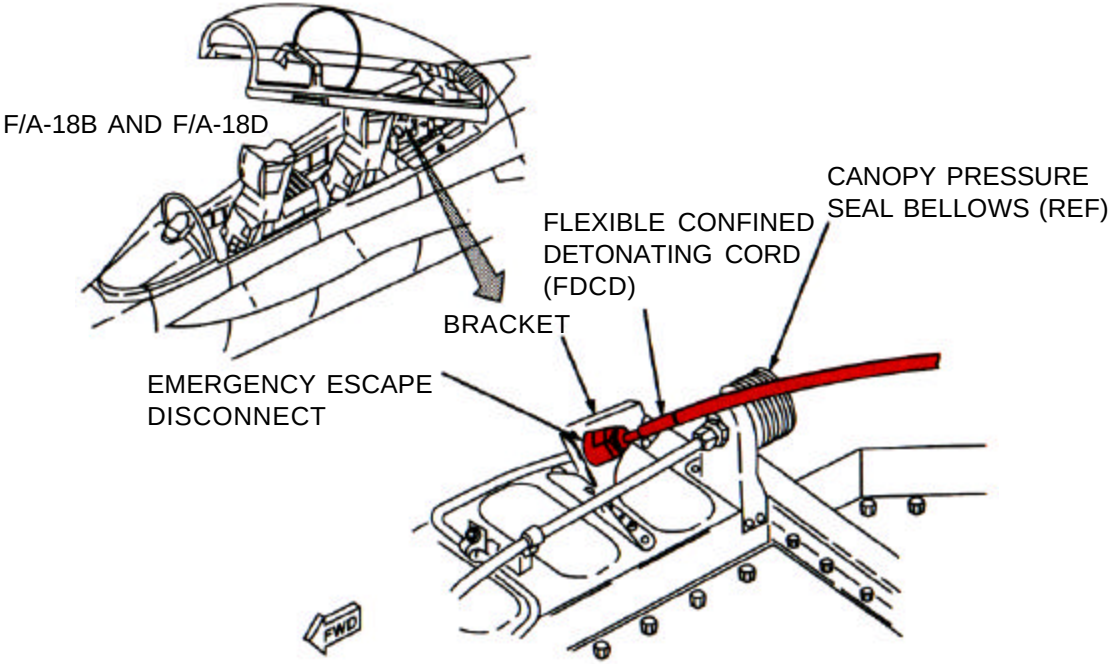

ENGINE AND APU SHUTDOWN

1. ENGINE SHUTDOWN-NORMAL AND EMERGENCY

NOTE:
The engines may be shut down by using the throttles or fuel shutoff valve controls.

a. Raise finger lifts and move throttles, located on the left cockpit console, fully aft to OFF position.

b. Lift guard and press the left and right fire warning lights, located on the upper forward instrument panel. A time delay of approximately 30 seconds or less (with engines at MIL through IDLE) may be expected before engine shutdown occurs.

NOTE:
On aircraft 160775 thru 160782 (F/A-18A, Cum 1 thru 7; F/A-18B, Cum 1), fuel shutoff valve controls are located aft of throttles. Pull controls to FULL UP position.

2. APU SHUTDOWN-NORMAL AND EMERGENCY

a. Auxilliary Power Unit (APU) may be shut down by placing APU switch, located on the left cockpit console aft of the engine throttles, in OFFposition.

WARNING

Puddling of fuel under aircraft indicates presence of residual fuel in engine bay. With APU running, this can cause fire or explosion. Ensure APU shutdown prior to crewmember rescue.

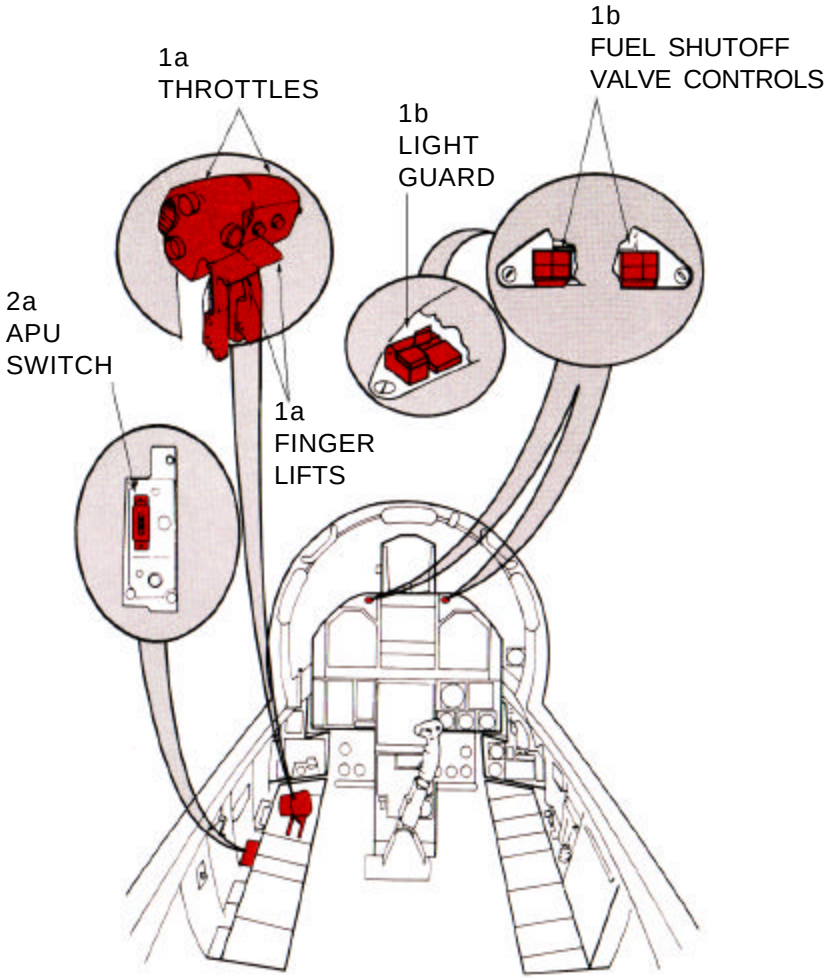

ENGINE AND APU EXTERNAL SHUTDOWN

1. ENGINE AND APU EXTERNAL SHUTDOWN

a. Disconnect electrical plug. If plug can not be disconnected, cut electrical cable with insulated cutters.

b. Turn manual override arm clockwise to CLOSED position.

NOTE:
On aircraft 160775 thru 160782 (F/A-18A, Cum 1 thru 7; F/A-18B, Cum 1), cut fuel shutoff valve linkage then turn shutoff valve arm forward.

c. Place APU emergency shutdown switch (LH side of nose wheelwell) down in shutdown position.

d. Place battery switch in OFF position to semi-isolate the two batteries.

e. To completely isolate the aircraft batteries, open external doors 10R and 10L (4 latches each), using a 1/4 inch drive socket wrench. Disconnect 4 battery bayonet couplings (2 per battery), turn couplings counterclockwise and pull.

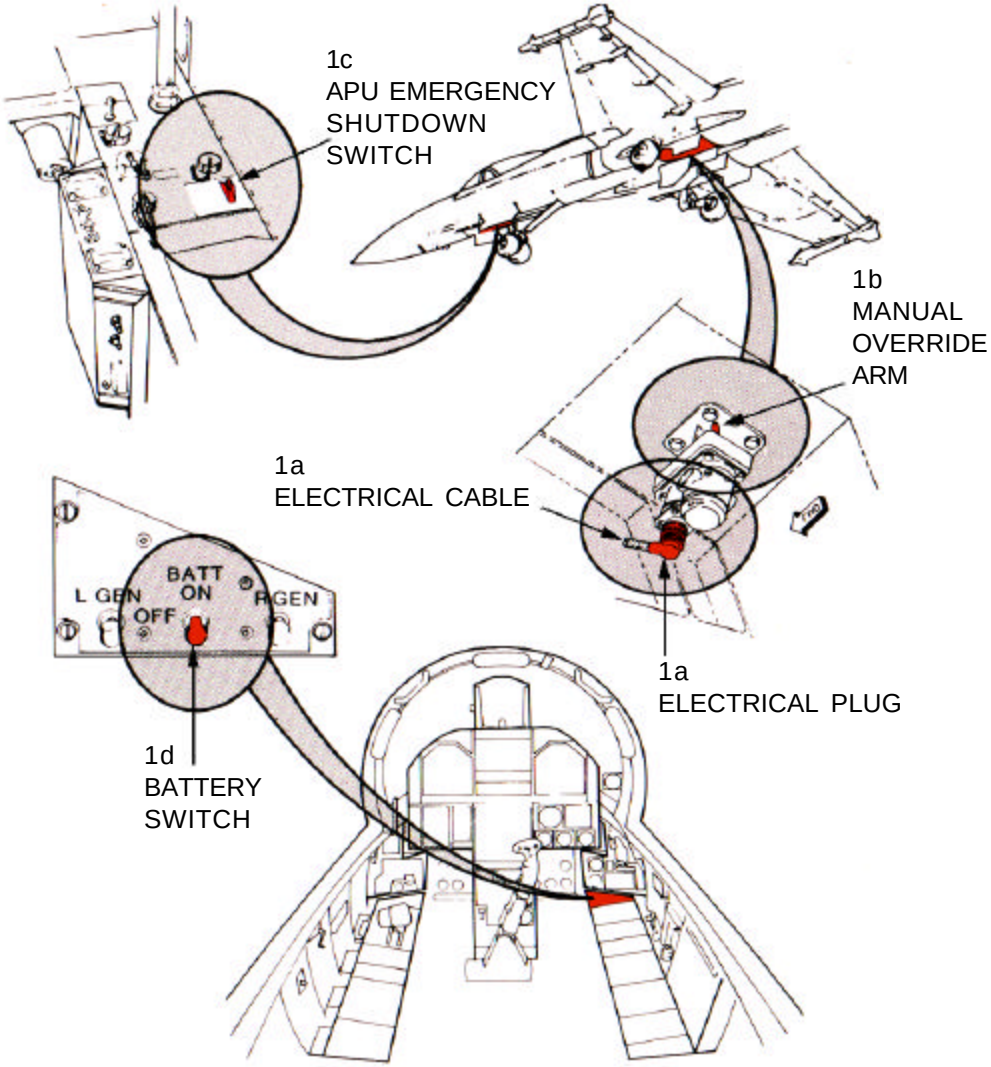

MARTIN-BAKER SJU-5/A, 6/A AND SJU-17(V)1/A, 2/A EJECTION SEATS

1. GENERAL INFORMATION

The F/A-18 uses two types of Martin-Baker ejection seats, the SJU-5/A, 6/A and SJU-17 (V) 1/A, 2/A. Both types are a rocket assisted ejection seat that provides support and necessary environmental equipment for crewmembers during flight, and a means of fast, safe escape during emergency flight conditions. The seat assembly incorporates features permitting seat ejection at ground level, at zero airspeed as well as during emergency flight conditions.

The basic structure of the seat consists of a main beam assembly, built to withstand high G-loads, support all of the components, and form the main framework for the seat.

The basic components of the seat assembly include a catapult, gas powered inertia reel, rocket motor, seat bucket assembly, drogue gun, parachute, guillotine, and survival equipment.

This ejection seat presents definite hazards which may cause fatal injuries to uninformed and careless personnel. Firefighting/rescue personnel must become thoroughly familiar with the locations and the safetying of the seat components in both normal and emergency conditions.

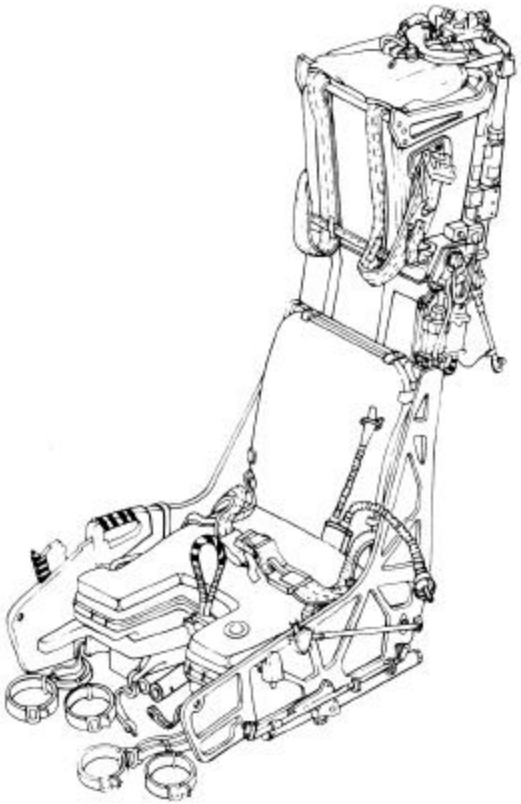

SJU-5/A, 6/A

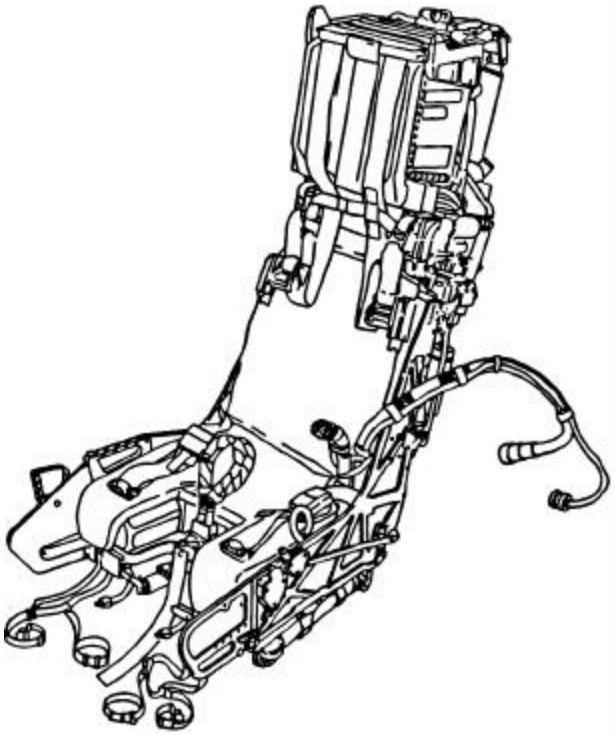

SJU-17(V)1/A, 2/A

EJECTION SEAT SAFETYING

1. EJECTION SEAT SAFETYING-NORMAL AND EMERGENCY-SJU-5/A, 6/A MODEL

NOTE:

Immediately upon gaining access to the aircraft cockpit, if time permits and no hazardous conditions exist, proceed with seat safetying procedures.

WARNING

If ejection control handle is not fully seated, safety pin cannot be installed and safe/armed handle cannot be rotated to the fully locked position. An unsafe seat exists if the entire word “SAFE” is not visible on the safe/armed handle. If ejection seat is not in a safe condi tion, initiation may occur if ejection control handle is pulled. Proper procedures for reset ting handle must be followed.

a. Insert safety pin into ejection control handle if handle is in first detent (stowed) position. If ejection control handle is not in stowed posi tion, return handle to first detent (stowed position) by pressing handle into its housing and inserting safety pin.

b. Press button on top of manual override handle and rotate handle UP and AFT. The safe/ armed handle will simultaneously rotate up and the entire word “SAFE” should be visible.

WARNING

In multi-seat aircraft, all ejection seats must be safetied.

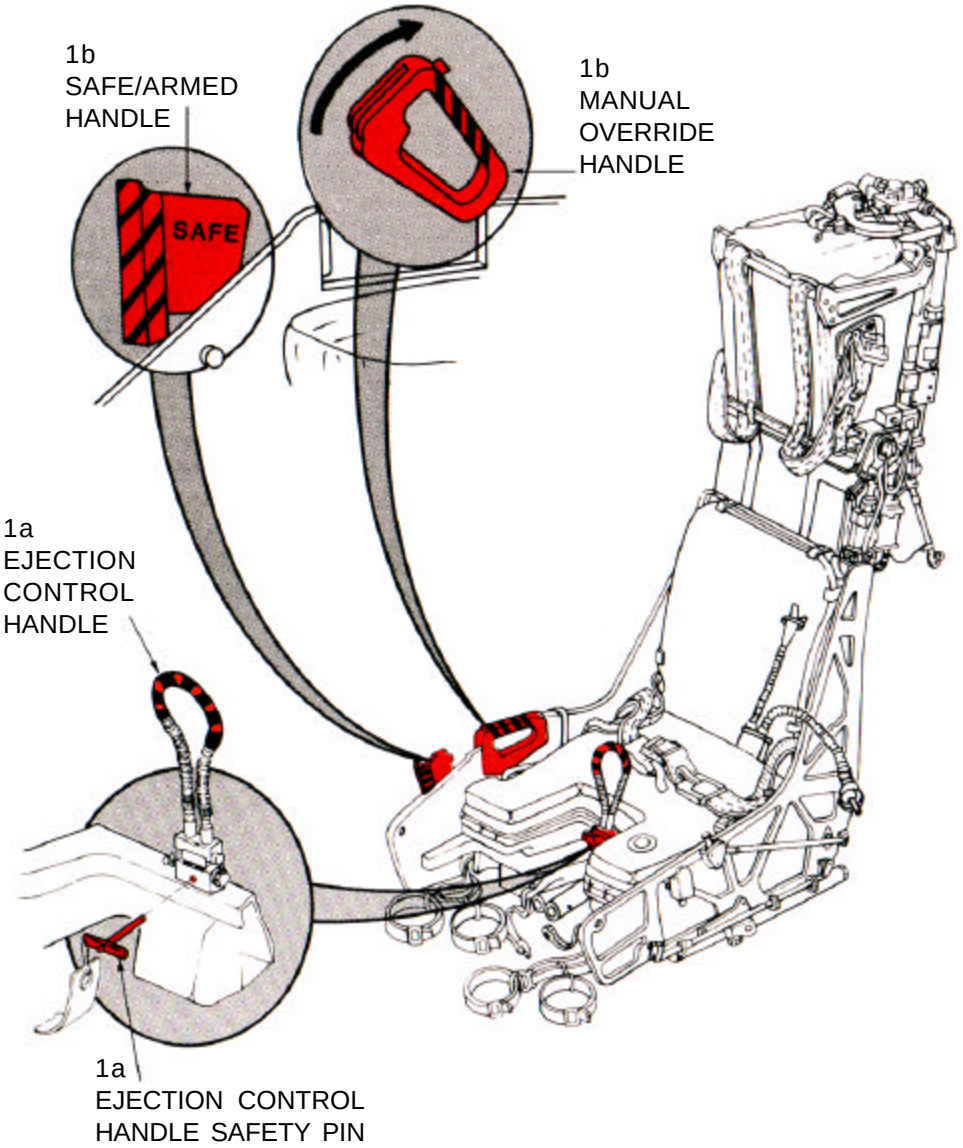

EJECTION SEAT SAFETYING-Continued

2. EJECTION SEAT SAFETYING-NORMAL AND EMERGENCY-SJU-(V)1/A, 2/A MODEL

NOTE:

Immediately upon gaining access to the aircraft cockpit, if time permits and no hazardous conditions exist, proceed with seat safetying procedures.

WARNING

If ejection control handle is not fully seated, safety pin cannot be installed and safe/armed handle cannot be rotated to the fully locked position. An unsafe seat exists if the entire word "SAFE" is not visible on the safe/armed handle. If ejection seat is not in a safe condi tion, initiation may occur if ejection control handle is pulled. Proper procedures for reset ting handle must be followed.

a. Insert safety pin into ejection control handle if handle is in first detent (stowed) position. If ejection control handle is not in stowed posi tion, return handle to first detent (stowed position) by pressing handle into its housing and inserting safety pin.

b. Press button on top of manual override handle and rotate handle UP and AFT. The safe/ armed handle will simultaneously rotate up and the entire word "SAFE" should be visible.

WARNING

In multi-seat aircraft, all ejection seats must be safetied.

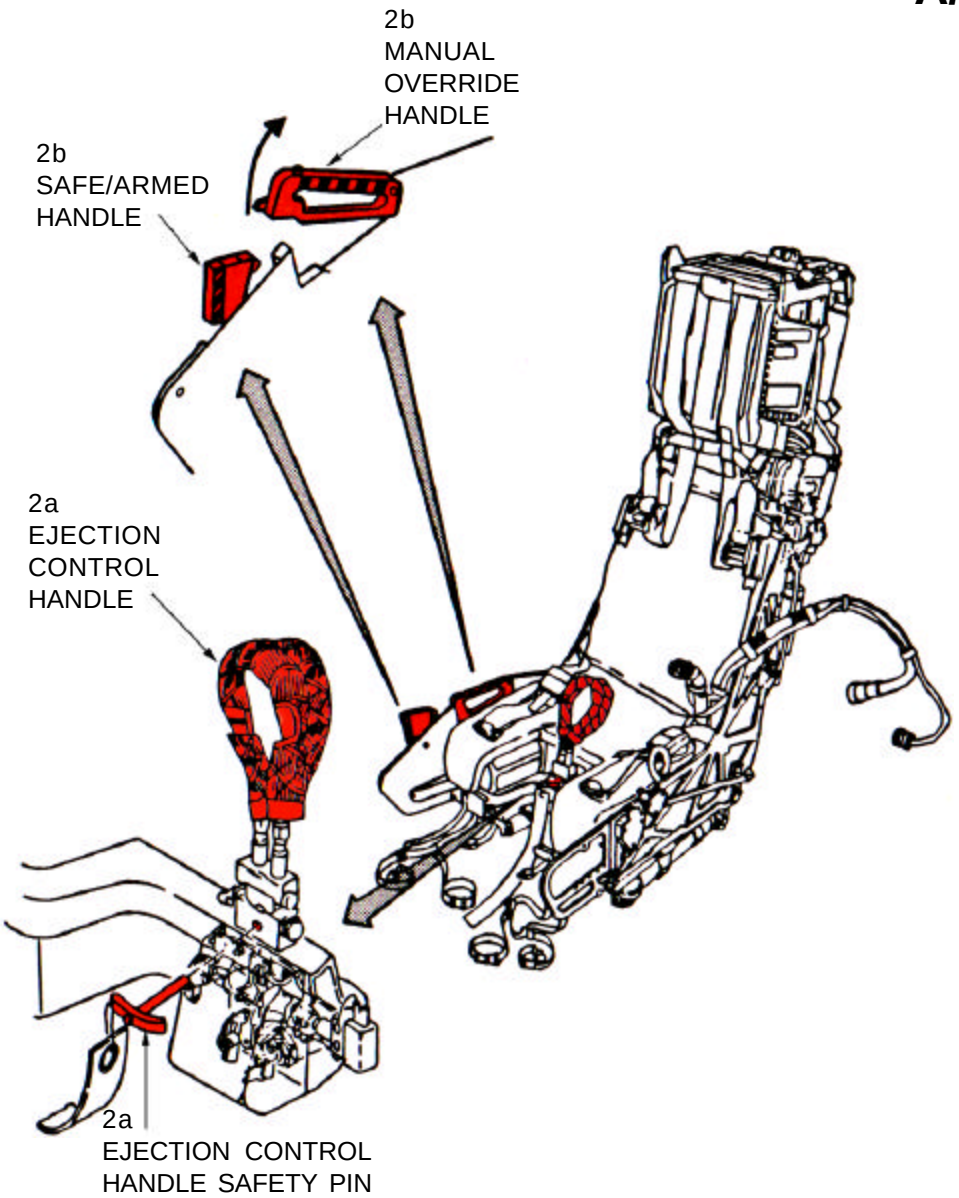

AIRCREW EXTRACTION

1. AIRCREW EXTRACTION

NOTE:
The crewmember is attached to the seat by the use of an integrated harness and leg restraints. Additionally, the oxygen/communication lead is attached to the survival kit. If the crewmember is wearing an anti-G suit, a hose will be attached to an outlet on the LH console.

a. To remove oxygen mask: Pull down release tabs on either side of crewmember helmet mask.

b. To disconnect the oxygen/communication lead at the survival kit on the left aft side of seat: Grasp knurled fitting on hose and pull up to disconnect.

c. To disconnect the anti-G suit: Pull anti-G suit hose from left seat connection.

d. To disconnect leg restraints: Release leg garters by applying pressure to tabs on both sides of each quick disconnect.

e. To disconnect restraints: Release two lap belt, then two shoulder harness koch fittings.

2. EMERGENCY RELEASE

a. Press thumb button on forward part of manual override handle, located on right side of seat, and rotate handle aft. This positions the safe/armed handle UP in safe position and releases lower leg restraint lines.However, the parachute and survival kit will remain attached to crewmember.

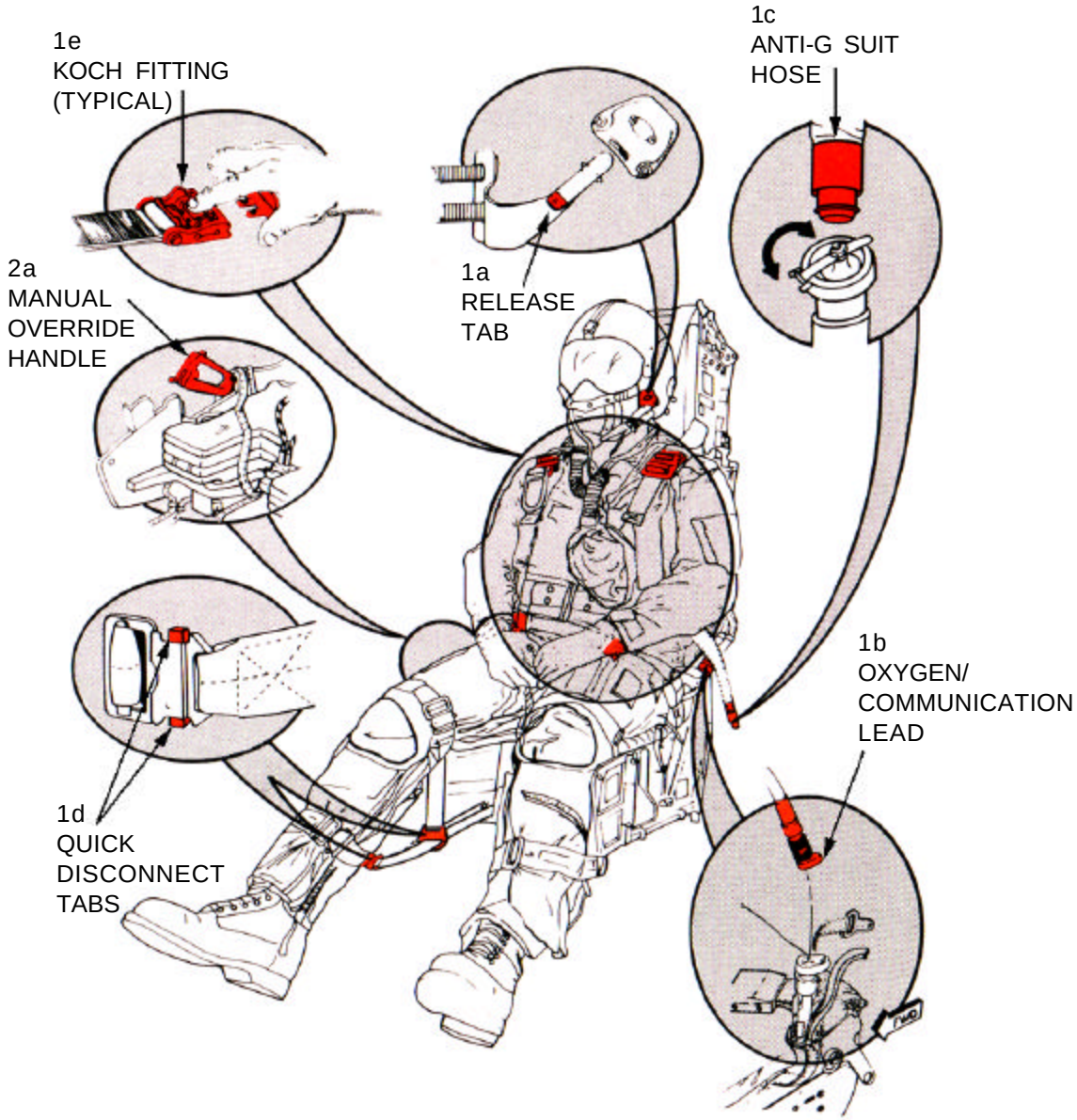

NOTE

Chapter 22 contains emergency rescue and mishap response information for the following aircraft:

USN	**E-2/E-2+**
USN	**E-6**
USN	**EA-6B**
USN	**P-3**
USN	**S-3**

CHAPTER 22

U.S. NAVY

SPECIAL MISSION

AEROSPACE EMERGENCY RESCUE AND MISHAP RESPONSE INFORMATION

22-1. INTRODUCTION AND USE.

22-2. This section contains emergency rescue and mishap response information illustrations in alphanumerical order relative to type and model of aircraft. This arrangement of illustrations is maintained from Chapter 4 throughout the remainder of the publication.

22-3. GENERAL ARRANGEMENT.

22-4. Aircraft type designation has been positioned in the upper right corner of the horizontal illustration for rapid identification. Additional aids to rapid orientation are:

a. Recent technological advances in aviation have caused concern for the modern firefighter. Aircraft hazards, cabin configurations, airframe materials, and any other information that would be helpful in fighting fires, the locating and rescue of personnel will be added as the information becomes available.

b. Suggested special tools/equipment are listed in the upper left corner, on the Aircraft/Entry page of each listed aircraft.

c. Procedural steps covering emergency/normal entrances, cut-ins, engine/APU shutdown, safetying ejection/escape systems, and aircrew extraction are outlined on the left side of each page with coordinated illustrations on the right.

d. Illustrations located on right side of pages are coordinated with text by numerals and small letters depicting both paragraph and subparagraph on the page.

e. Each illustration is consistently colored and/or pattern keyed to highlight essential emergency rescue information.

f. Details are pulled directly from the illustration to highlight an area, thus eliminating unnecessary searching for desired information.

AIRCRAFT DIMENSIONS

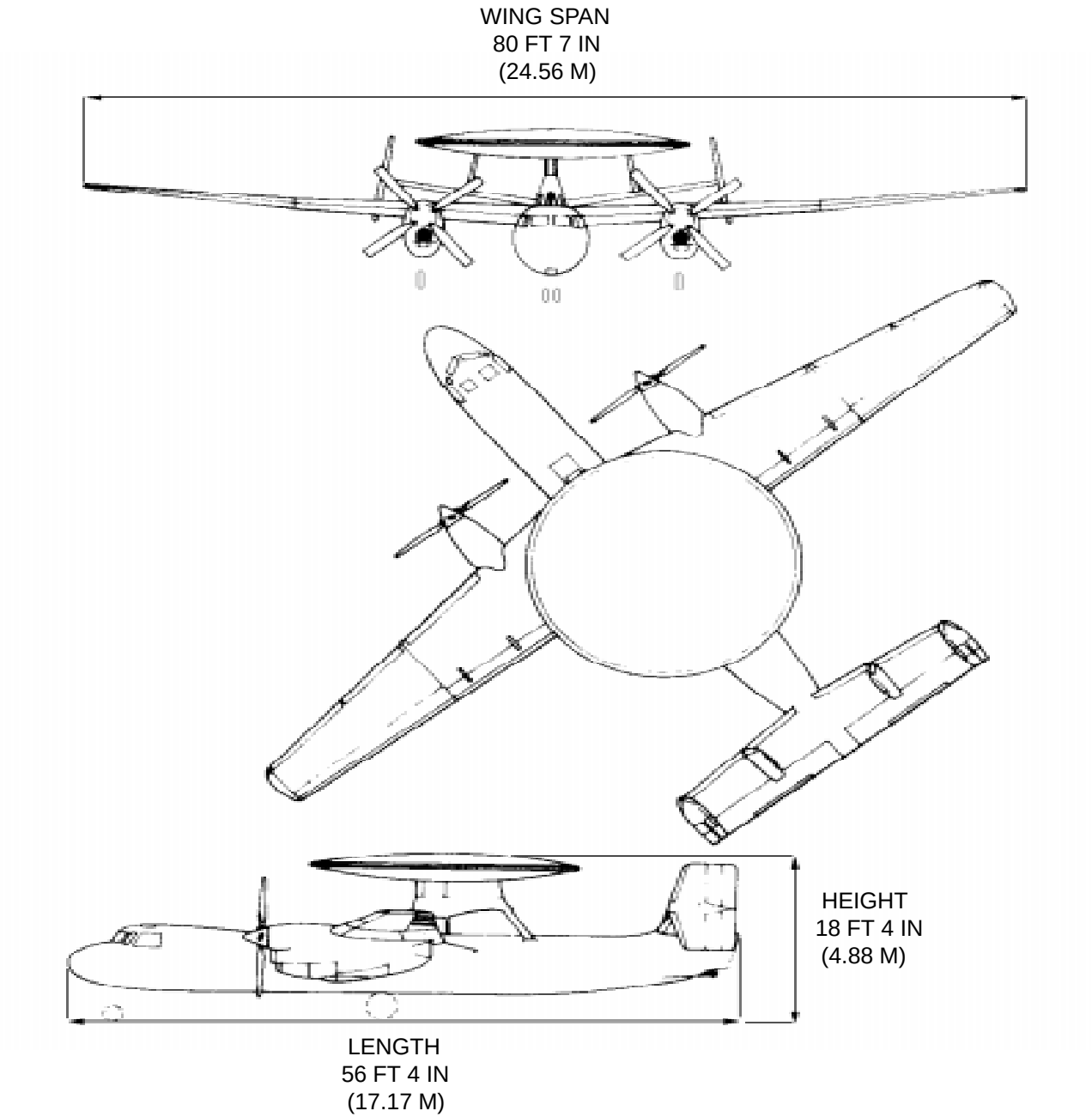

AIRCRAFT HAZARDS

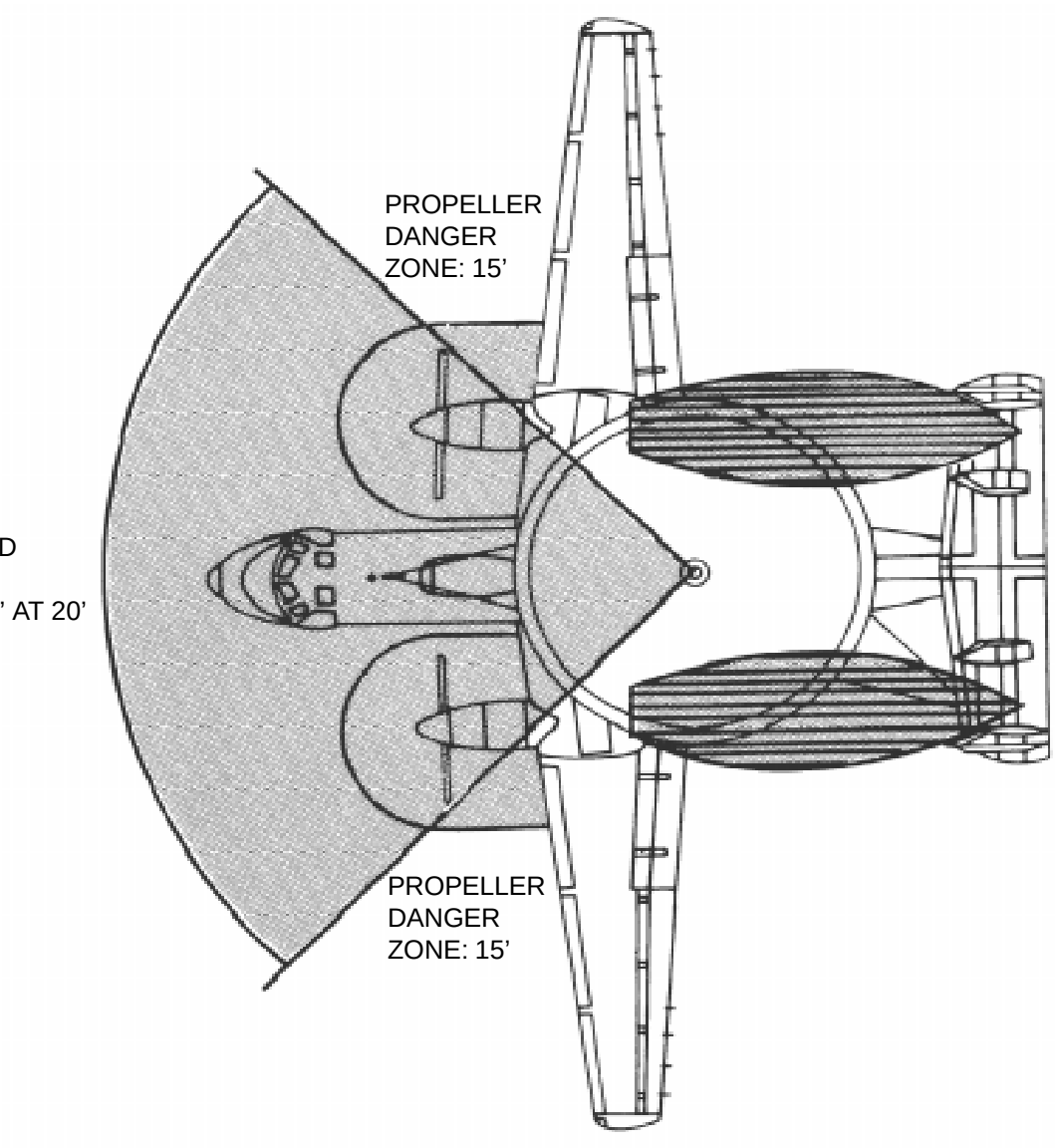

RADIATION:
SECTOR A MAIN LOBE FWD
90 DEGREE ARC AT 170’
SECTOR B MAIN LOBE 360’ AT 20’

AIRFRAME MATERIALS

LEGEND

- ALUMINUM
- STEEL
- OTHER FIBERGLASS

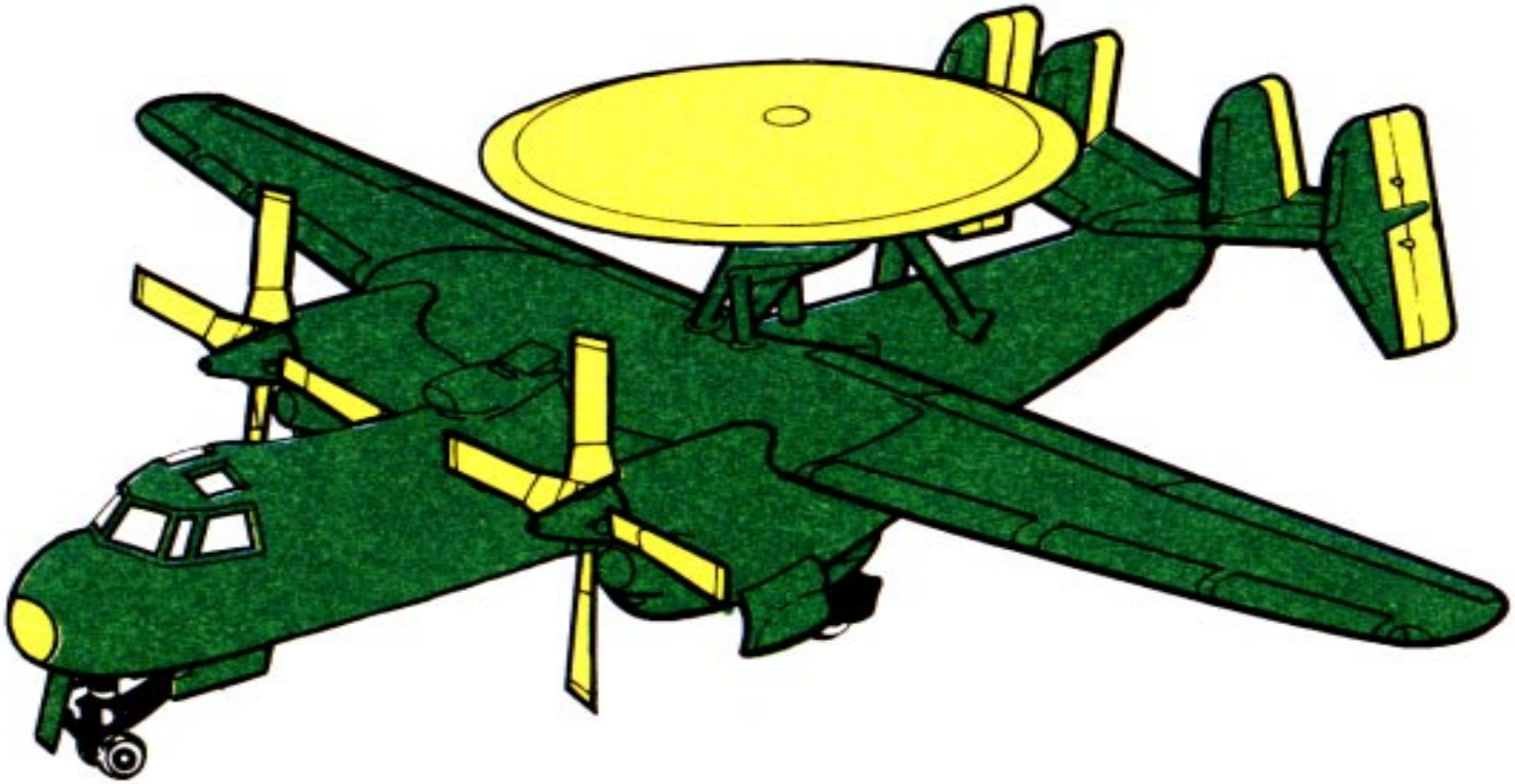

SPECIAL TOOLS/EQUIPMENT
Power Rescue Saw
Crash Ax

AIRCRAFT ENTRY

1. NORMAL ENTRY

a. Stand forward of door.

WARNING

Clearance between door, propeller and forward edge of door is minimal and extremely dangerous. The cabin may be pressurized.

b. Turn handle to UNLOCK position.

c. Pull hand grip on door and support door during opening.

2. EMERGENCY ENTRY

a. Emergency entry is through pilot and copilot escape hatches and the CIC compartment ditching hatch aft top right hand of aircraft.

3. CUT-IN/FORCED ENTRY

a. Using power rescue saw or crash ax, cut through fuselage forward on top center of fuselage and around cockpit windows.

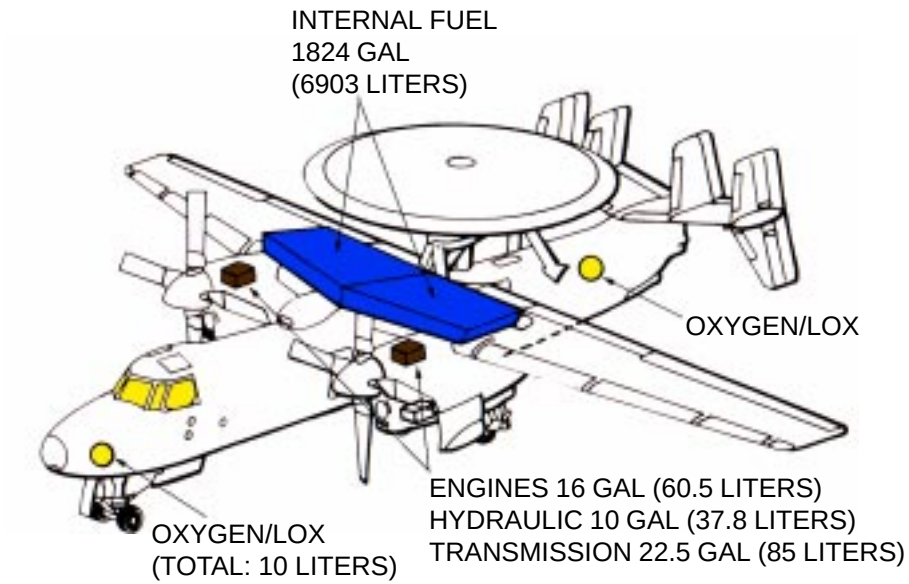

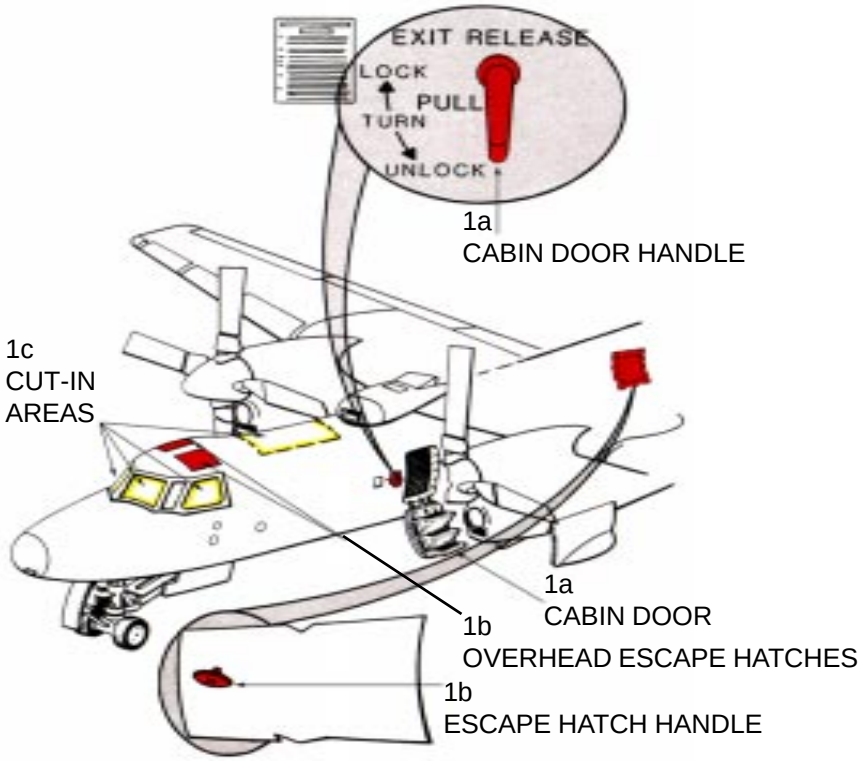

ENGINE SHUTDOWN

1. ENGINE SHUTDOWN

a. To move the condition levers, located on center console, to different positions, the detent release at the outboard side of each condition lever must be lifted, then move condition levers to extreme AFT position.

b. Place left and right generator switches, located on the overhead control panel, in OFF position.

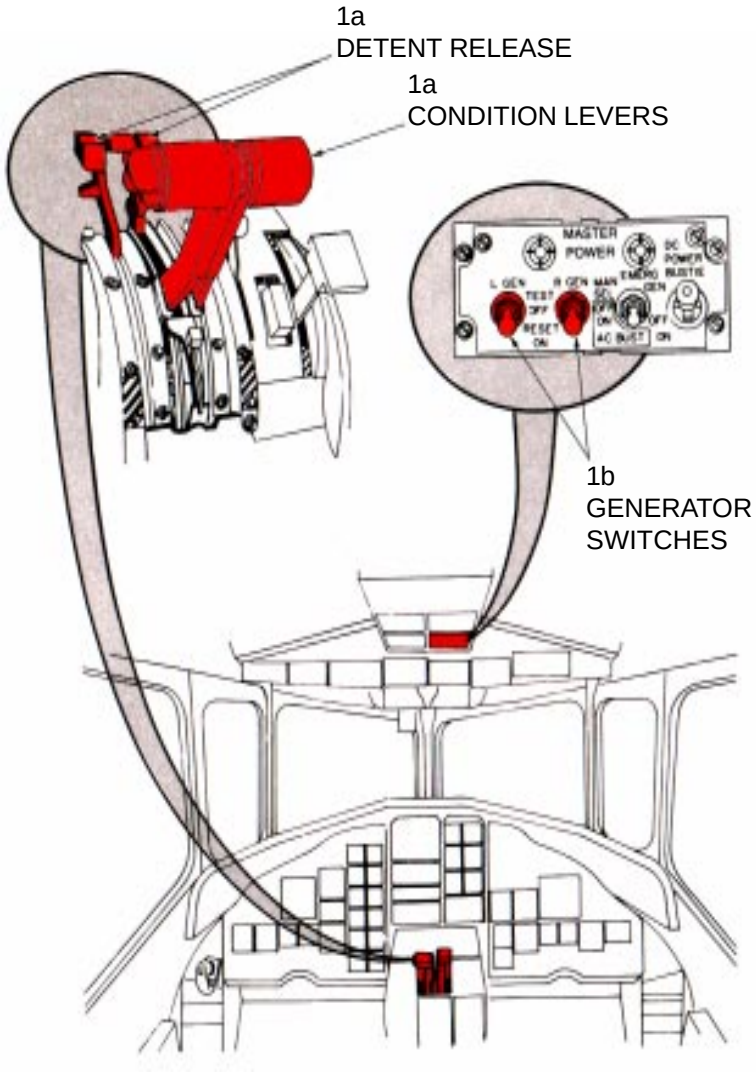

AIRCREW EXTRACTION

1. AIRCREW EXTRACTION

NOTE:
Crewmembers are attached to the seats by use of a torso harness.

a. Remove oxygen mask by pulling down on release tabs on either side of helmet mask.

b. The oxygen/communication lead is joined by a positive locking ring. To release, pull up on round collar while pulling apart connection.

c. Release two lap belts, then two shoulder harness koch fittings.

2. EMERGENCY RELEASE

a. Actuating the emergency release handle, located on forward right side of seat, will free the crewmember from the seat. However, the parachute and survival kit will remain attached to the crewmember.

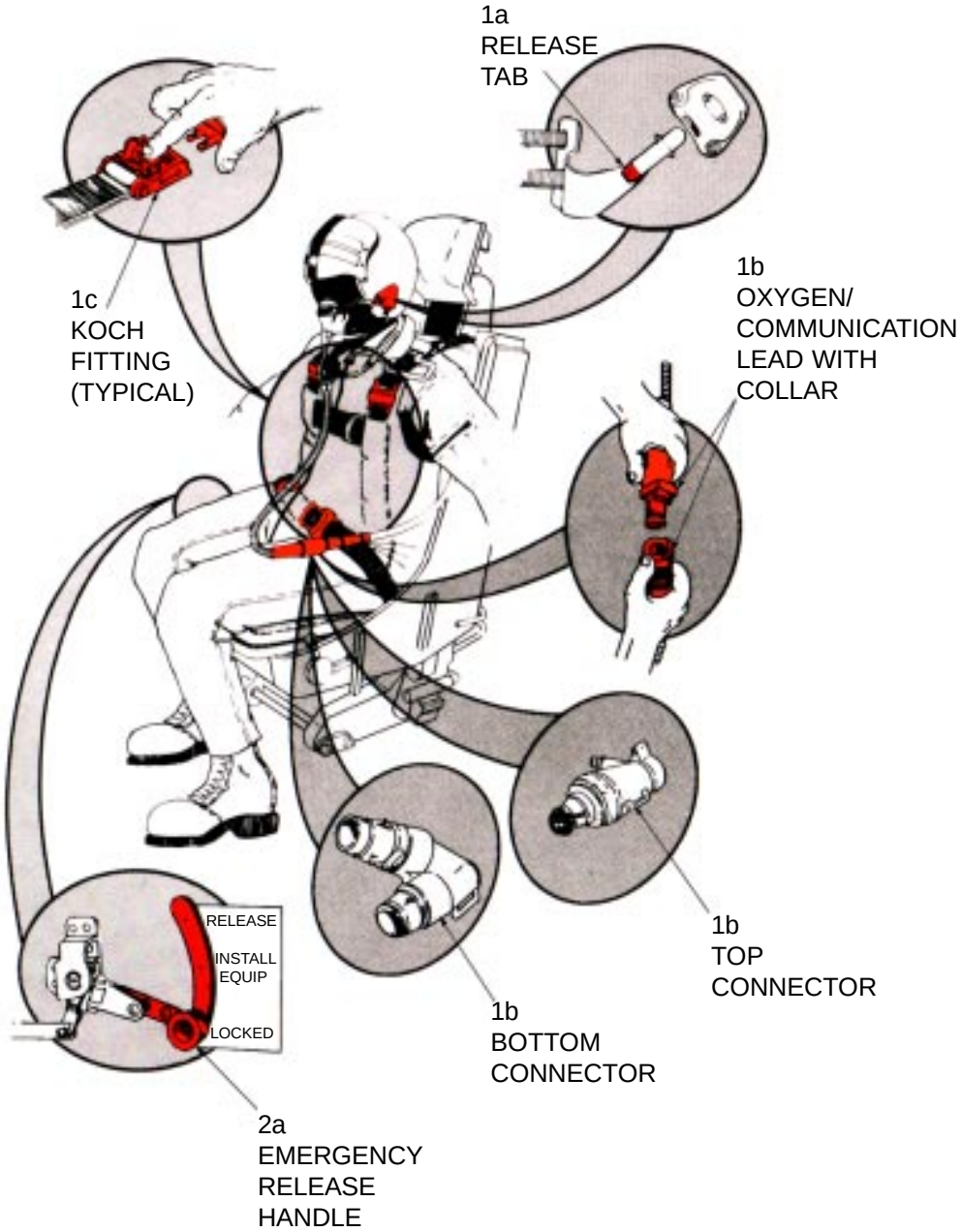

E-6

NOTE:

The US Navy E-6A is the same as the USAF E-6B. Refer to Chapter 7, pages E-6B.1 thru E-6B.6 for complete procedures.

NOTE:

The US Navy EA-6B is the same as the USAF EA-6B. Refer to Chapter 7, pages EA-6B.1 thru EA-6B.8 for complete procedures.

AIRCRAFT DIMENSIONS

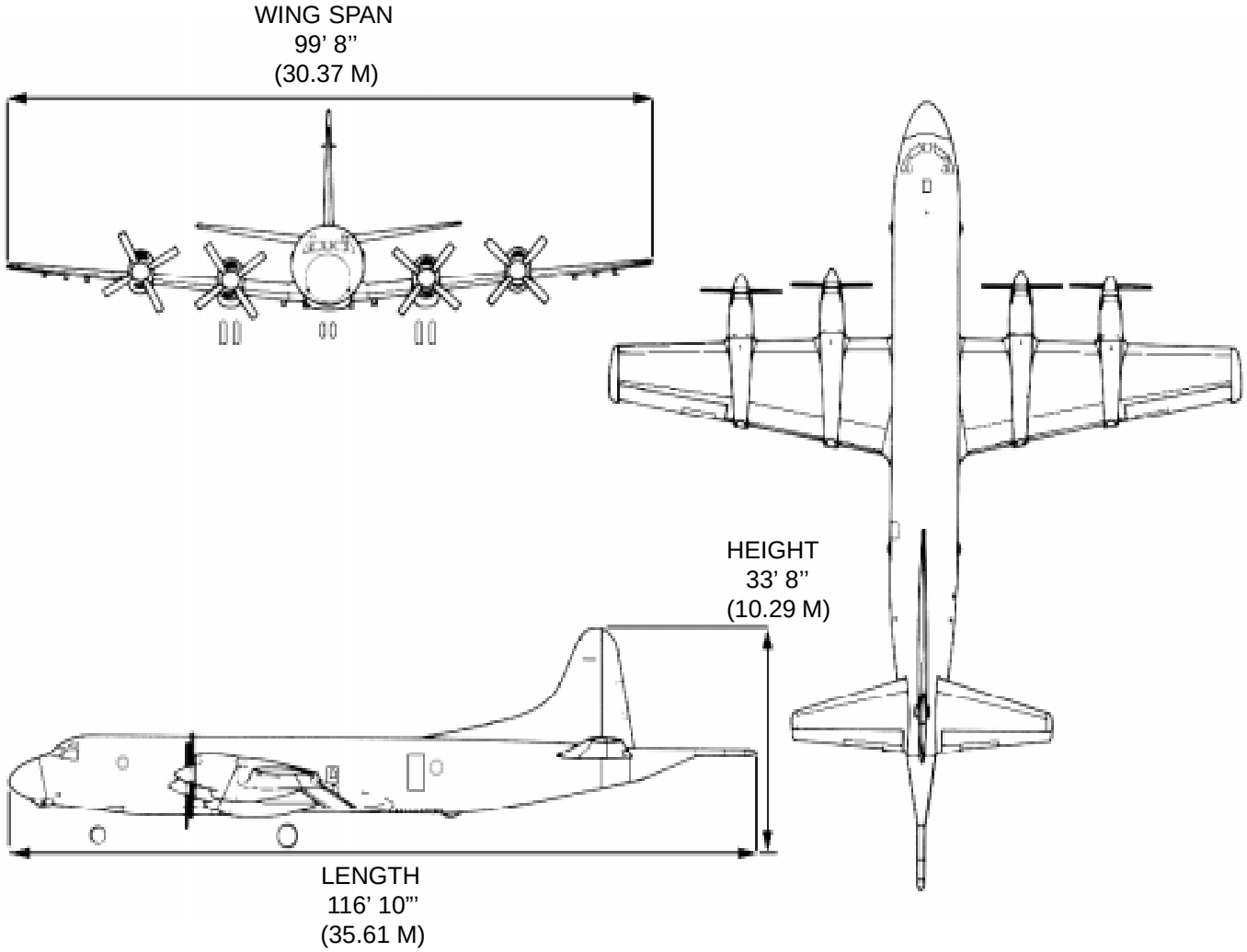

AIRCRAFT HAZARDS

WARNING

Since the antennas rotate 360 degrees, the beam may extend beyond the 180 degree area shown. Safe areas have not been determined.

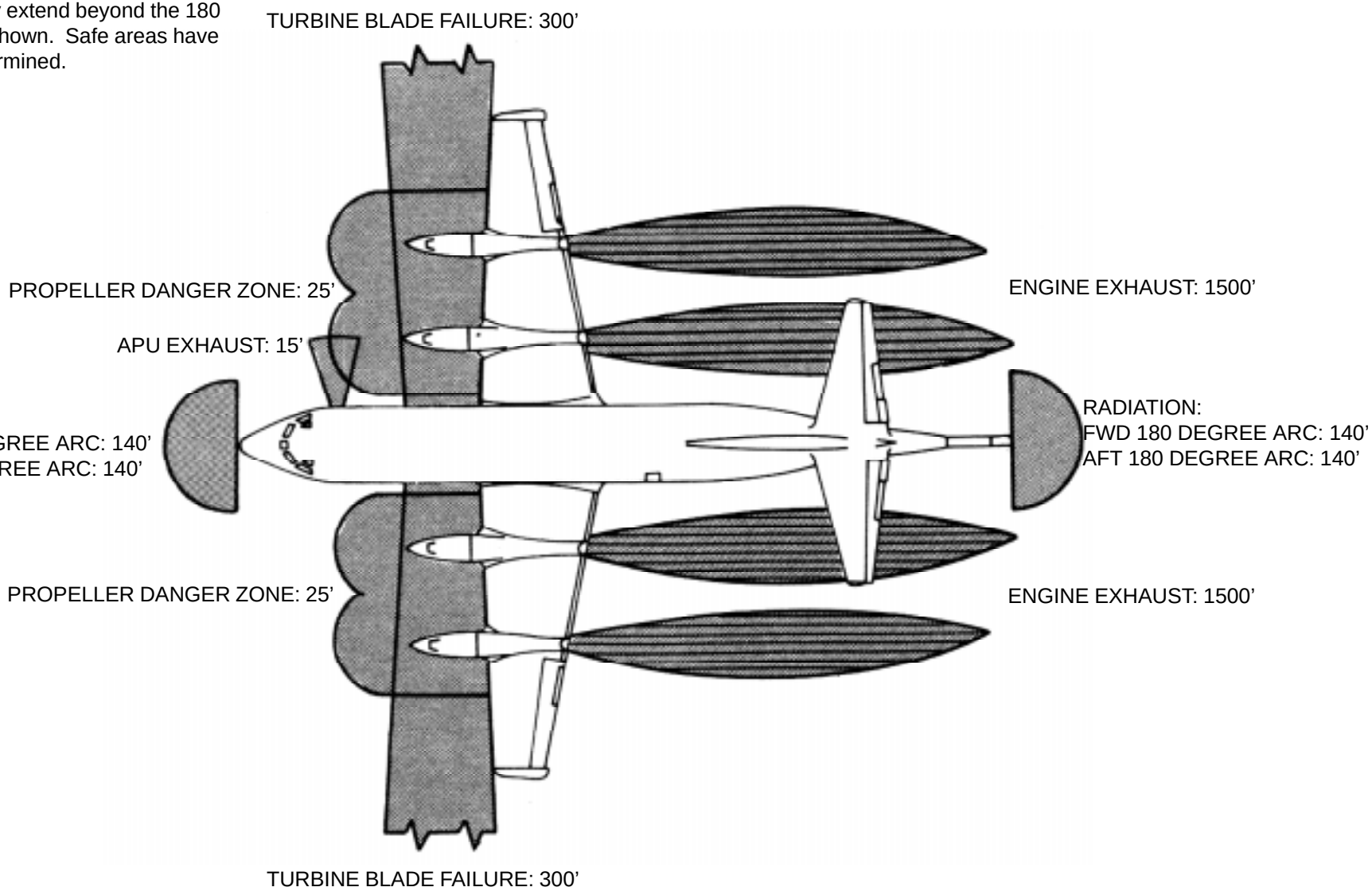

AIRCRAFT HAZARDS-Continued

NOTE:

In normal wheels down landing, ground wheels down switches safety the armament systems.

WARNING

Pylons are loaded with ejector cartridges. In the event of wheels-up landing, secure all electrical power to ensure armament system safety.

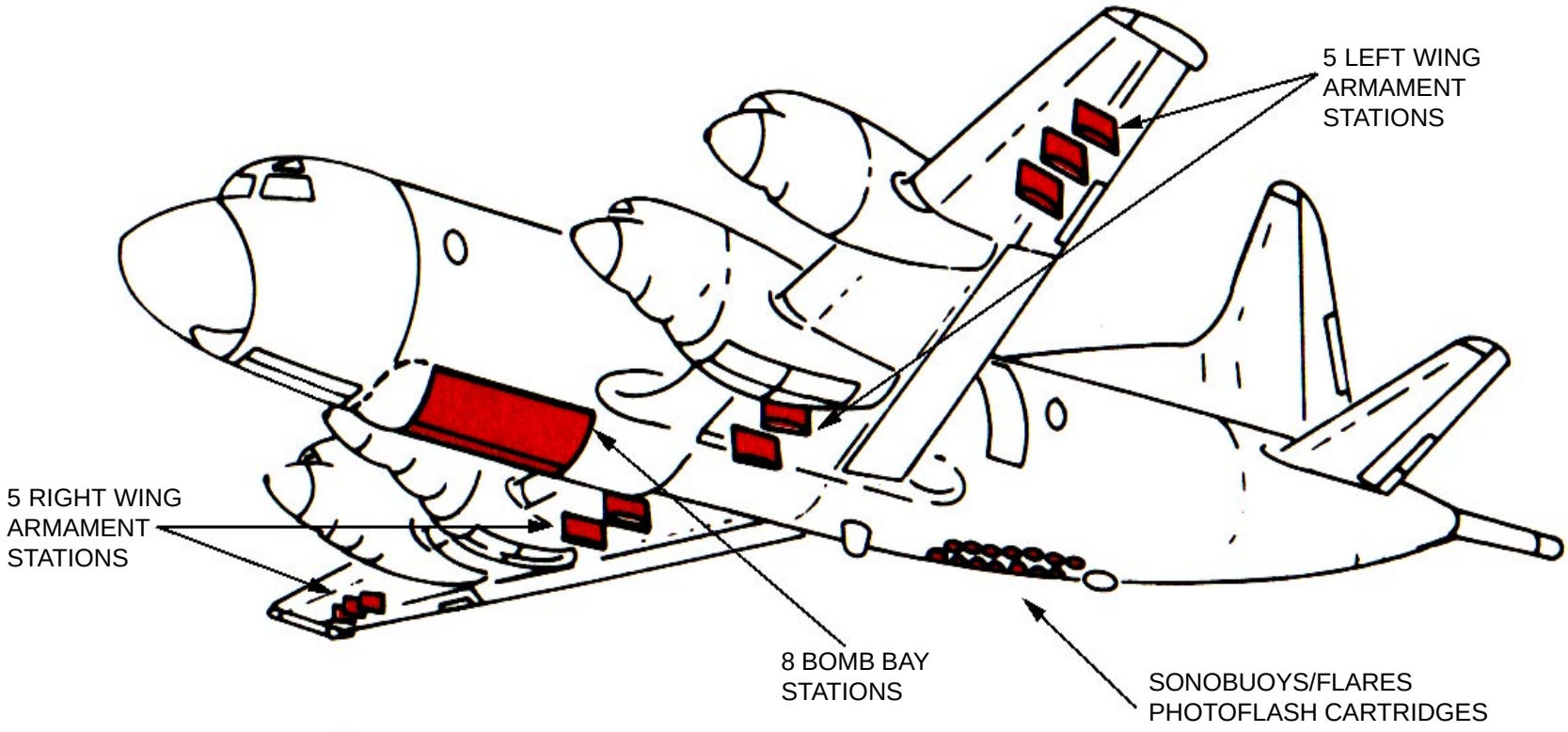

AIRFRAME MATERIALS

LEGEND

- ALUMINUM
- STEEL
- OTHER FIBERGLASS

P-3

SPECIAL TOOLS/EQUIPMENT
Power Rescue Saw
Crash Ax

AIRCRAFT ENTRY

1. NORMAL ENTRY

NOTE:
Normal entry is through aft cabin door on left side of fuselage.

a. Push button under release handle to release cabin entry handle.

b. Turn cabin entry handle counter-clockwise to open cabin door.

2. EMERGENCY ENTRY

NOTE:
In the event the main entrance door is inaccessible, emergency entrance may be gained through three areas.

a. Flight station escape hatch, located over the cockpit. Push button on hatch to release hatch from locked position. Pull hatch open.

b. Pilot's auxilliary exit, located left side of fuselage just aft of pilot's window. Push button on hatch to release hatch. Pull hatch open.

c. Overwing emergency exit hatches, located both sides of fuselage. Push button on hatch to release hatch. Pull hatch open.

3. CUT-IN/FORCED ENTRY

a. Cut out entry areas as indicated in graphic using power rescue saw or crash ax.

NOTE:
Pneumatic sytem:
3000 PSI.

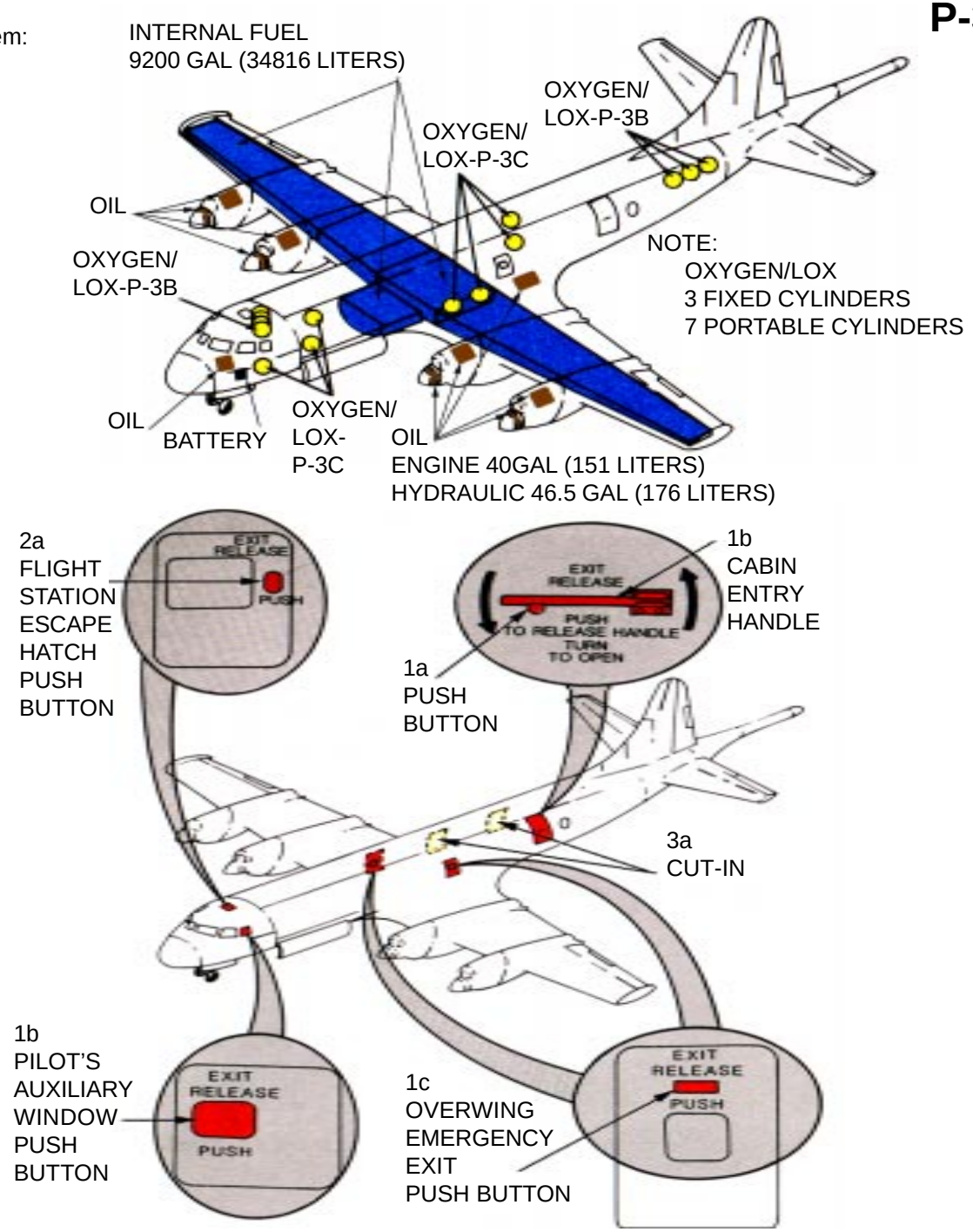

ENGINE/APU SHUTDOWN

1. ENGINE/APU SHUTDOWN

a. Set parking brake by depressing toe pedals and pulling parking brake handle.

b. Pull all four emergency shutdown handles.

c. Place APU switch in OFF position. APUs may be secured externally by a safety switch located on left side of fuselage forward of the APU.

NOTE:
The APU Normal/Safe switch also disables the automatic fire extinguisher circuit.

d. To deactivate battery, located in nose wheelwell, remove quick disconnect fitting. (See battery location on page P-3.5.)

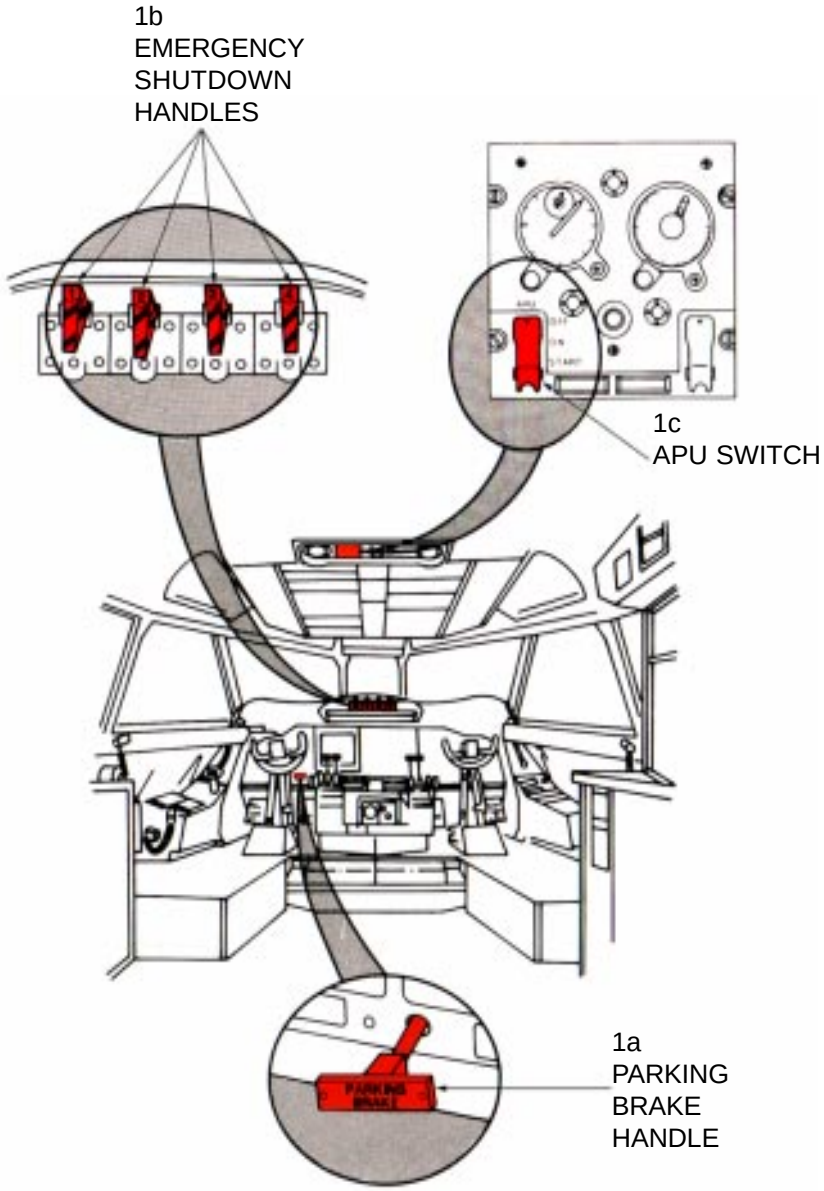

AIRCREW EXTRACTION

1. AIRCREW EXTRACTION

NOTE:
The pilot, co-pilot, flight engineer, and radio operator on the P-3B have shoulder harnesses and lap belts. All other crewmembers have lap belts only.

NOTE:
The pilot, co-pilot, flight engineer, TACCO, Nav Comm, and SS-3 on the P-3C have shoulder harnesses and lap belts. All other crewmembers have lap belts only.

a. Lift quick disconnect lever, located at central connect point, to release shoulder harnesses and lap belts.

b. To adjust seat to the aft of seat tracks, pull up on adjustment lever, located at the forward center seat bucket, while pushing seat aft. This will allow more room for crewmember extraction.

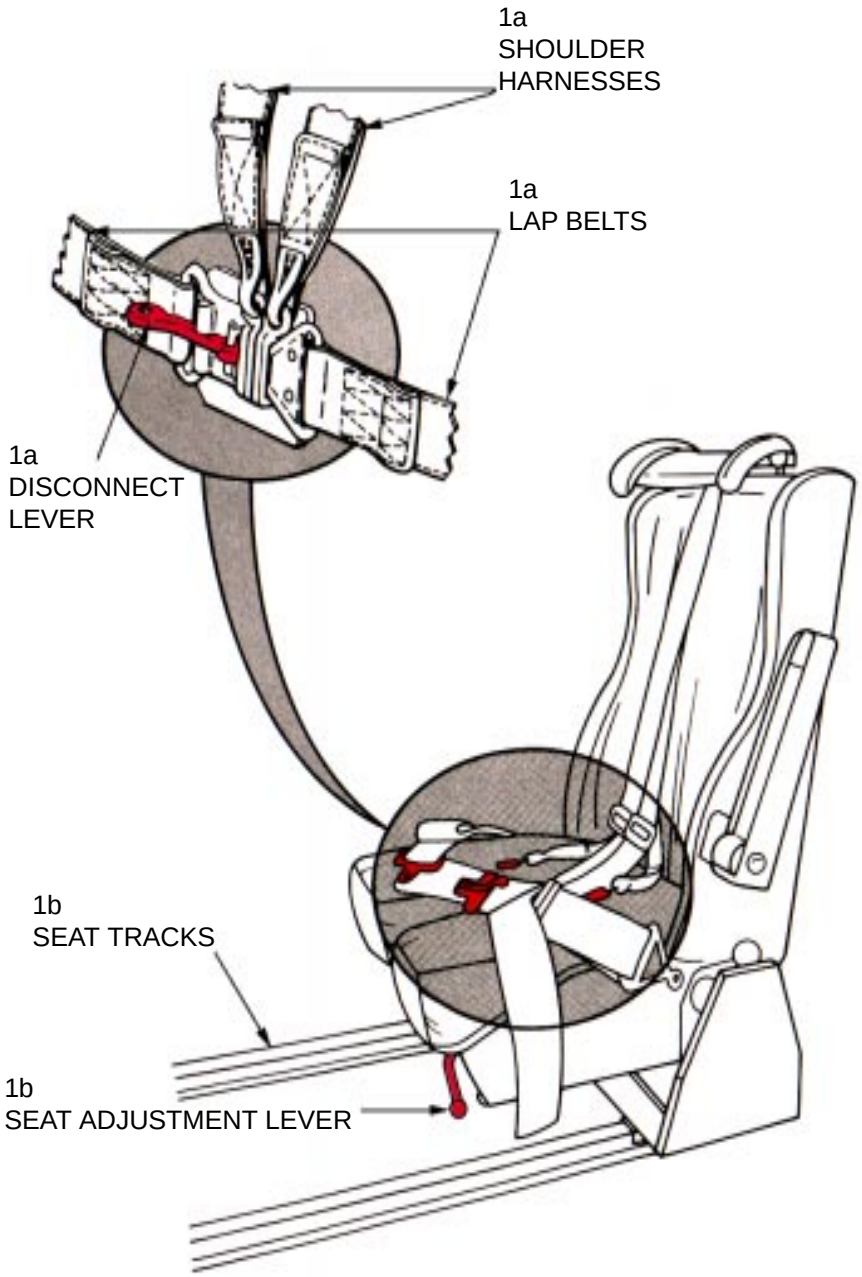

AIRCRAFT DIMENSIONS

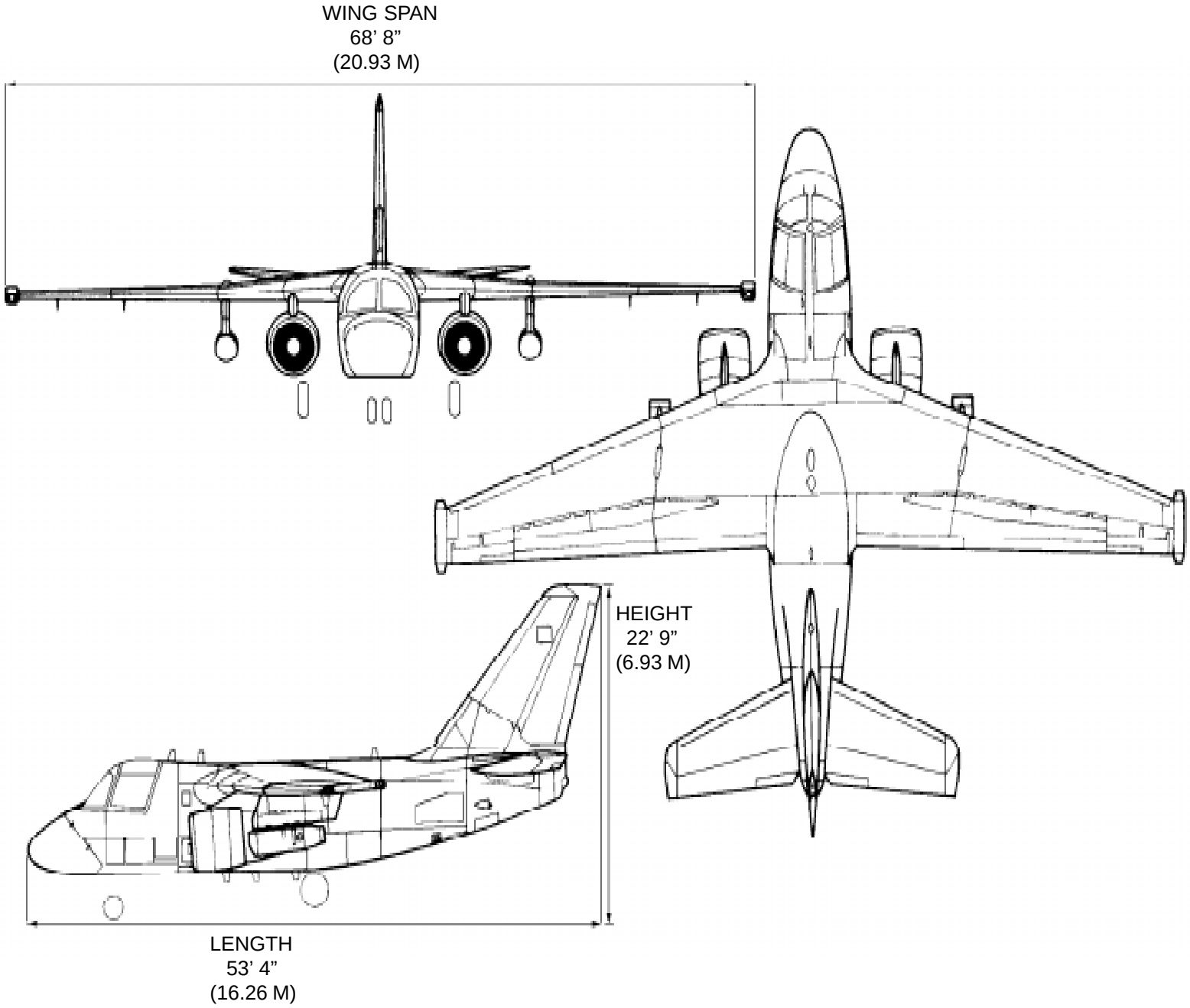

AIRCRAFT HAZARDS

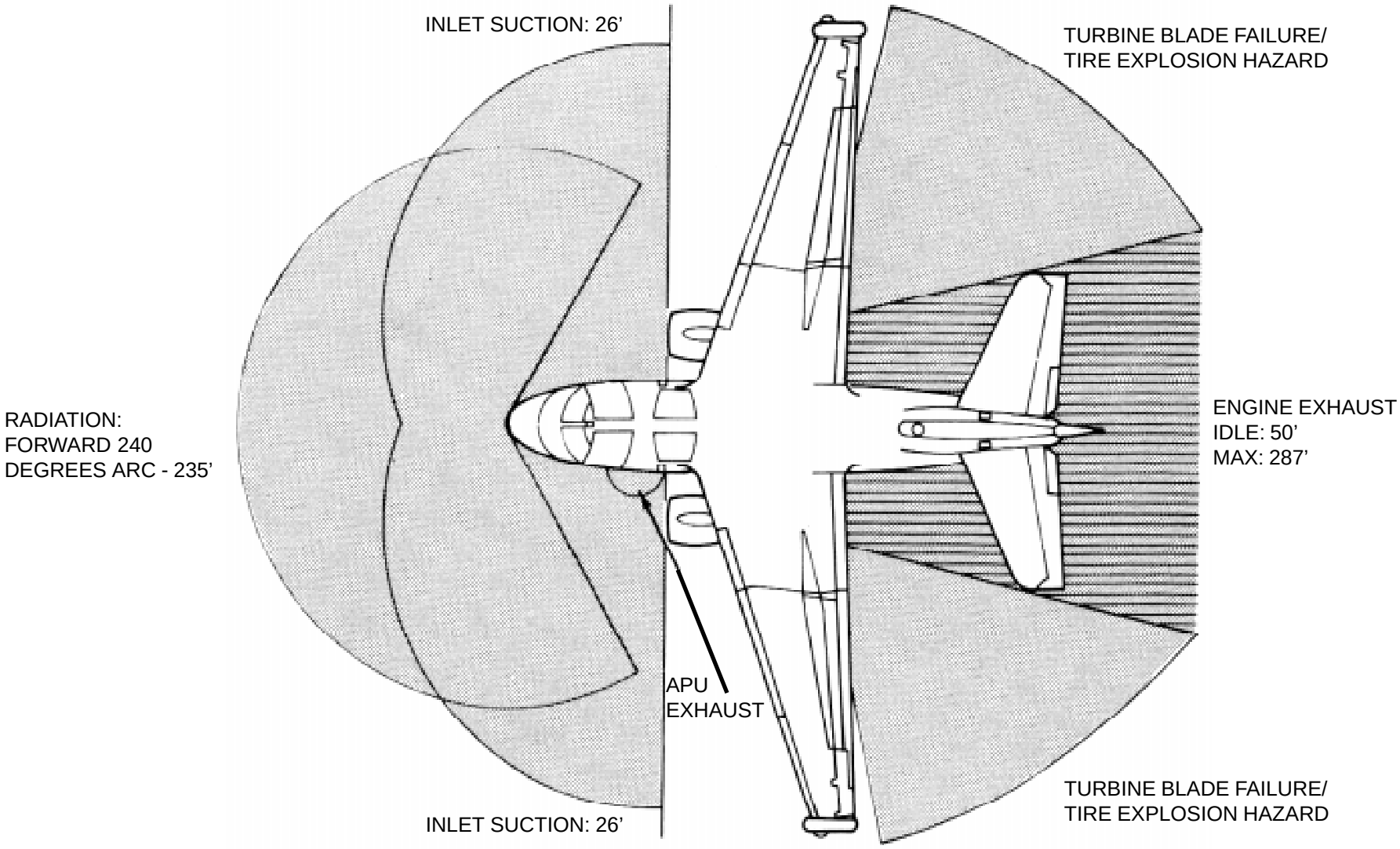

AIRCRAFT HAZARDS-Continued

NOTE:

In normal wheels down landing, ground wheels down switches safety the armament systems.

WARNING

In the event of wheels-up landing, secure all electrical power to ensure armament system safety.

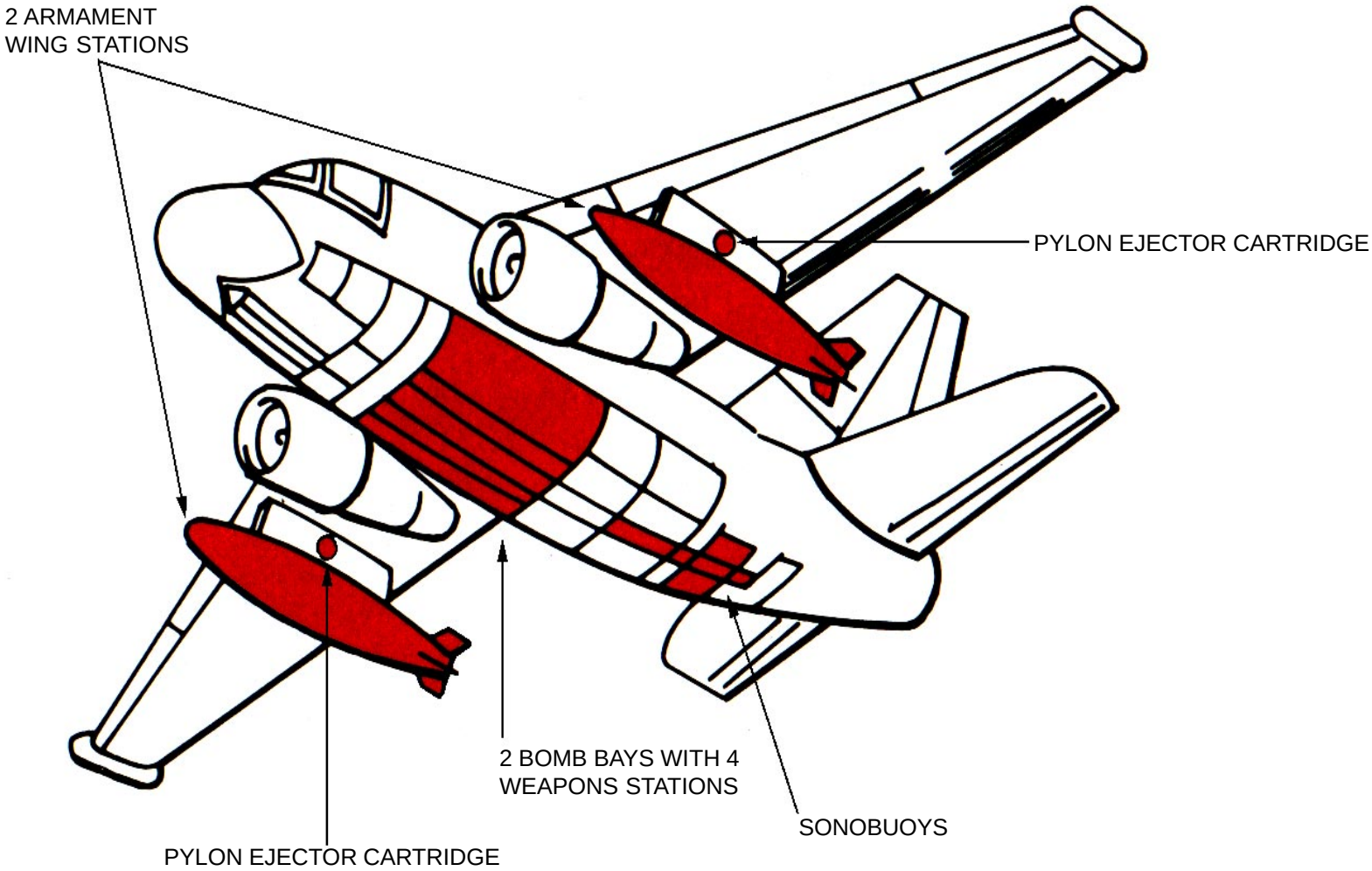

AIRFRAME MATERIALS

LEGEND

- ALUMINUM
- STEEL
- OTHER FIBERGLASS

SPECIAL TOOLS/EQUIPMENT
Power Rescue Saw
Crash Ax

AIRCRAFT ENTRY

1. NORMAL ENTRY

NOTE:
Entry to cockpit is through personnel door on right side of fuselage.

a. Press trigger to release handle and press latch button. Rotate counterclock wise 15 degrees.

b. Release latch button and rotate handle to the UN LOCKED position.

c. Push in handle and rotate clockwise to stow.

d. Press latch button and lower door (use hand grip in middle step). Raise lift bar and engage door stop.

2. EMERGENCY ENTRY

a. Through the two forward canopies and two aft hatches, open rescue T-handle access door on either side of aircraft.

b. Verify that all rescue personnel are clear of canopies and hatches. Pull hatch severance T-handle away from aircraft and as far forward as possible (about 10 feet). Continue with hard pull; this will free the hatches and canopies from the aircraft (pieces of debris will be forced away from aircraft).

3. CUT-IN/FORCED ENTRY

a. If normal or emergency entry procedures cannot be accomplished, break or cut through pilot or co-pilot/ COTAC canopy or aft hatches with ax or power rescue saw. Cut along canopy frame. Manually remove canopies and hatch frames to clear opening. Use left and right forward access panels and footholds to reach the pilot and co-pilot/COTAC. Use right aft fuselage steps and handholds to reach the aft hatch opening and the two aft occupants.

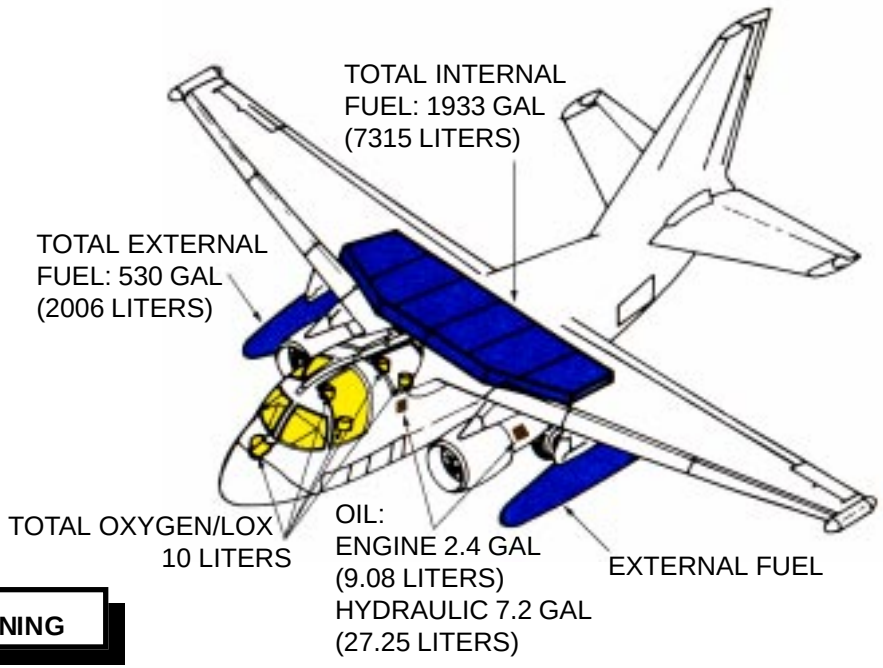

WARNING

Failure to release lock-release button after approximately 15 ^{0} of rotation may cause personnel access door to blow down if crew compartment has not depressurized.

WARNING

Shattering of canopie can be dangerous to rescue personnel. Do not jettison canopies with fuel in cockpit area, fire or explosion may result.

NOTE:
If one rescue handle does not sever the canopies and hatches, try the other side.

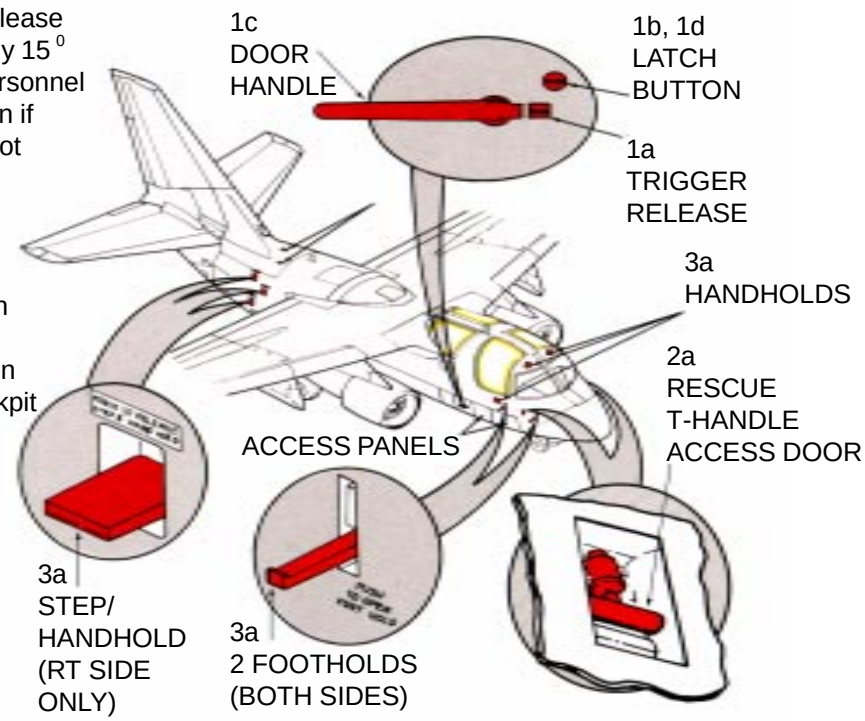

CANOPY SAFETY AND ENGINE/APU SHUTDOWN

1. CANOPY SAFETY

a. Canopy and hatches are equipped with a mild explosive which uses a detonating cord and a liner shaped charge. To safety jettison system, insert safety pins in jettison handles at 3 locations - left and right corners of forward main instrument panel and center over windshield panel.

2. ENGINE/APU SHUTDOWN

a. Move pilot's throttles, located on left console, to OFF position by moving one throttle at a time.

NOTE:
Engines cannot be shut down with the co-pilot's throttles.

b. Pull fire handles #1 and #2, located at center over windshield panel, to shutoff fuel valves to engines.

c. Place APU T-handle, located at right aft center console, in OFF position.

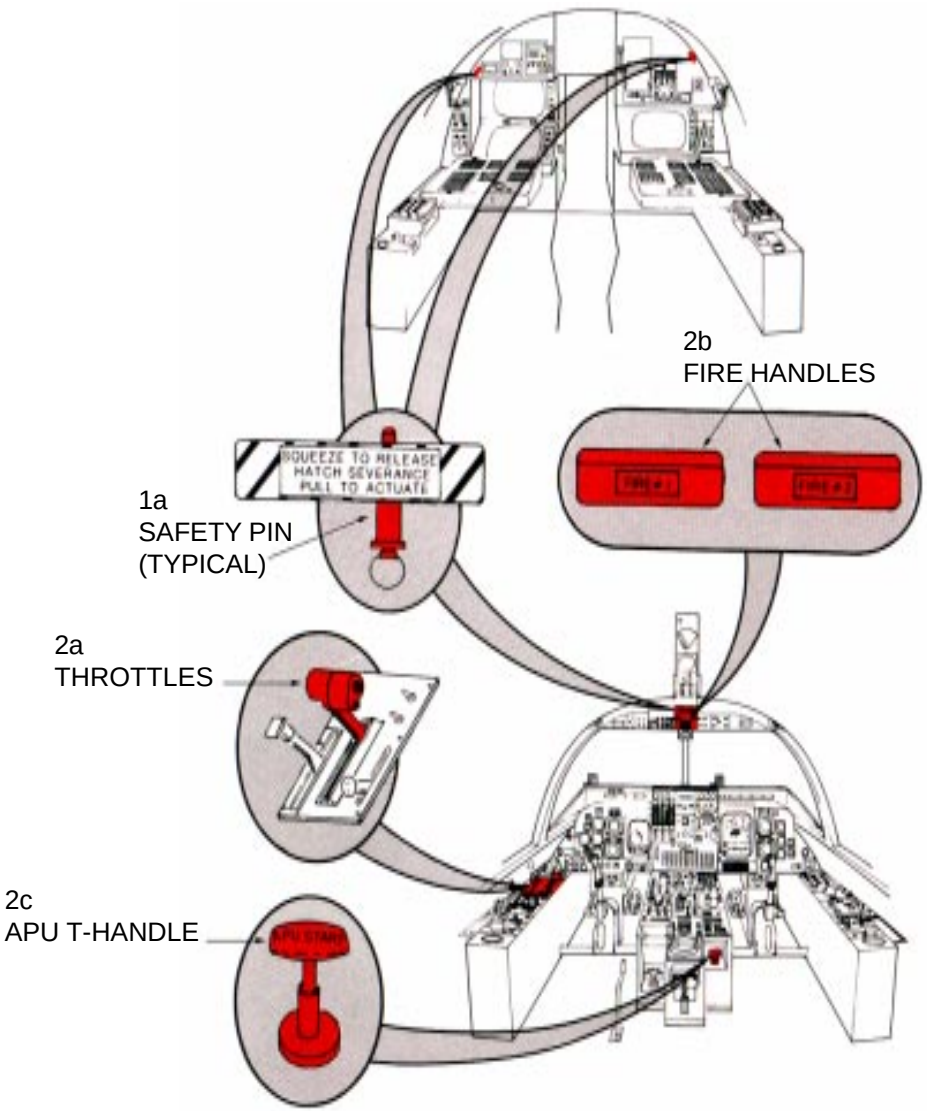

ESCAPAC 1E-1 EJECTION SEAT

1. GENERAL INFORMATION

The ESCAPAC 1E-1 is a catapult rocket ejection seat that provides support and necessary environmental equipment for crewmembers during flight, and a means of fast, safe escape during emergency flight conditions. The seat assembly incorporates features permitting seat ejection at ground level, at zero airspeed as well as during emergency flight conditions.

The basic structure of the seat consists of lightweight aluminum, built to withstand high G-loads, support all of the components, and form the main framework for the seat.

The basic components of the seat assembly include a rocket catapult, balistic powered inertia reel, parachute, seat/man separator rocket, survival equipment, and seat stabilization system.

This ejection seat presents definite hazards which may cause fatal injuries to uninformed and careless personnel. Firefighting/rescue personnel must become thoroughly familiar with the locations and the safetying of the seat components in both normal and emergency conditions.

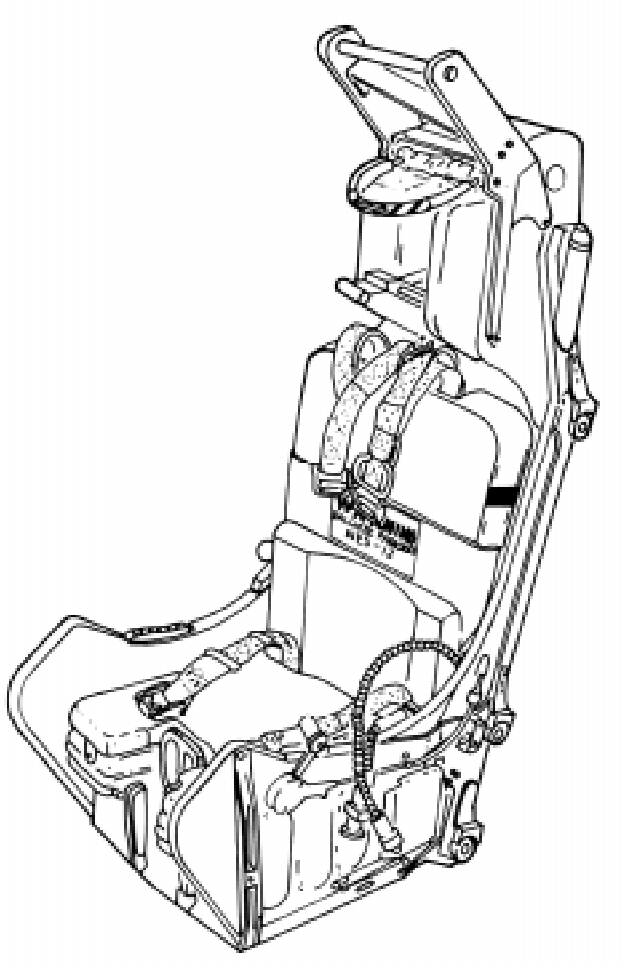

EJECTION SEAT SAFETYING

1. EJECTION SEAT SAFETYING

NOTE:
Immediately upon gaining access to the aircraft cockpit, if time permits and no hazardous conditions exist, proceed with seat safetying procedures:

a. If crewmember is blocking ejection seat safety control handle, pull inertia reel control handle aft and pull pilot forward to expose ejection seat control handle.

b. Place ejection seat safety control handle in DOWN/LOCKED position.

c. Place command ejection lever, on both pilot and co-pilot's seats, in the UP/SELF EJECT position.

WARNING

In mult-seat aircraft, all ejection seats must be safetied due to command ejection possibility.

WARNING

This ejection seat has an NES-12 ballistic parachute. Do not use harness release handle to free crewmember from seat.

WARNING

When removing personnel from ejection seats, do not allow crewmembers or rescue personnel to become entangled in lower seat ejection handle or use face curtain handle as a support or hand hold.

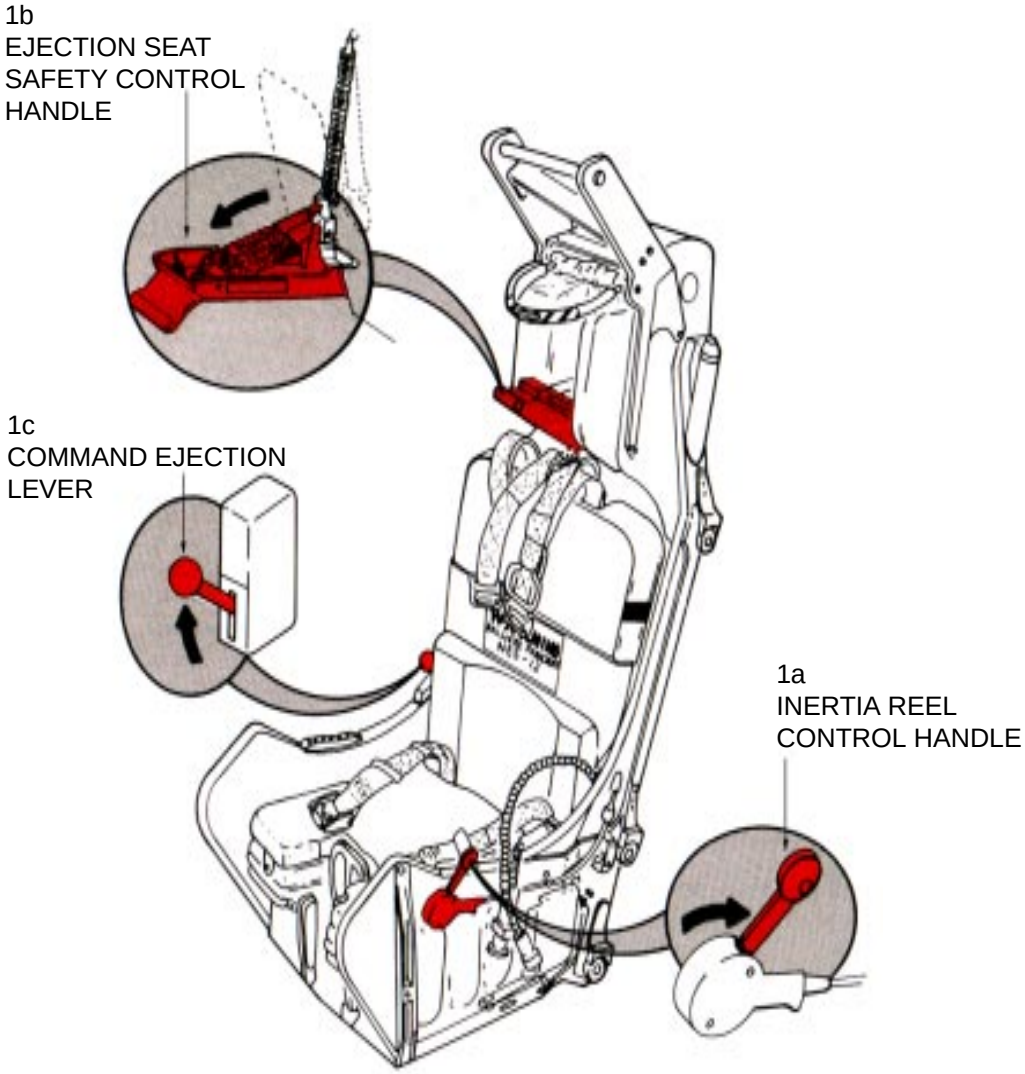

AIRCREW EXTRACTION

1. AIRCREW EXTRACTION

NOTE:

The crewmembers are attached to the seat by the use of an integrated harness. Additionally, the oxygen/communication lead is attached to the survival kit.

WARNING

Inadvertent ejection of seat selected in command-eject mode (either pilot or co-pilot/ COTAC seat) will eject all four seats regardless of the position of their individual ejection seat safety levers.

a. Remove oxygen mask by pulling down on release tabs on either side of helmet mask.

b. The oxygen/communication lead is joined by a positive locking ring. To release, pull up on round colar while pulling apart connection.

c. Release two lap belts, then two shoulder harness koch fittings.

d. Actuating the emergency release handle will free the crewmember from the seat. However, the parachute and survival kit will remain attached to the crewmember which increases difficulty of removing crewmembers if exit through opposite canopy is required.